50MHz Dual-trace Storage Oscilloscope
PM3219

Service Manual

9499 445 00411
811015

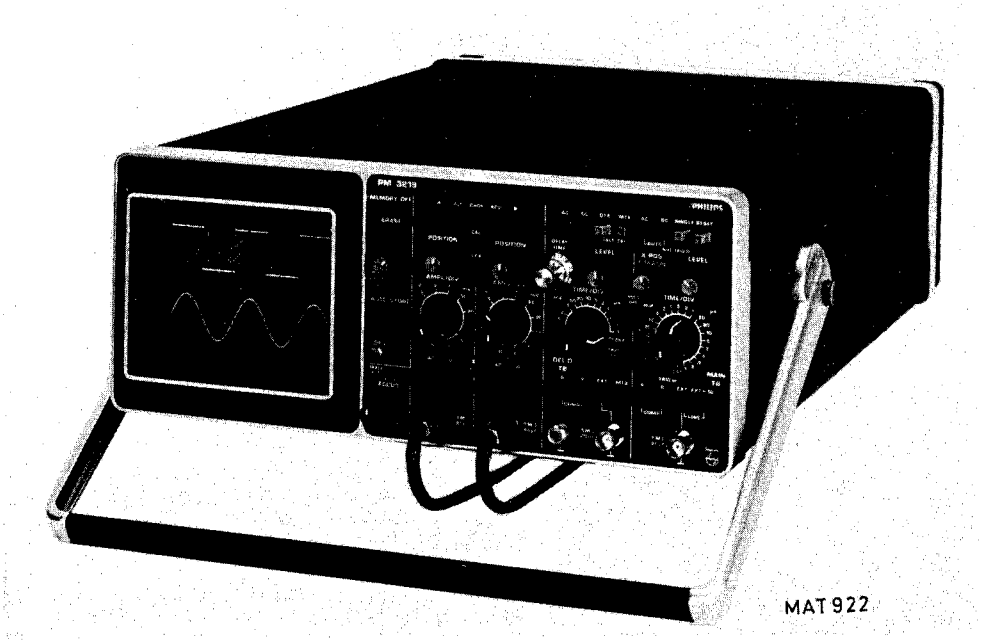

PHILIPS

PHILIPS

IMPORTANT

In correspondence concerning this instrument, please quote the type number and serial number as given on the type plate.

NOTE: *The design of this instrument is subject to continuous development and improvement. Consequently, this instrument may incorporate minor changes in detail from the information contained in this manual.*

© N.V. PHILIPS' GLOEILAMPENFABRIEKEN - EINDHOVEN - THE NETHERLANDS - 1981

CONTENTS

Page

1. GENERAL INFORMATION 5

1.1. Introduction 5

1.2. Characteristics 6
1.2.1. C.R.T. 6
1.2.2. Vertical system 6
1.2.3. Horizontal system 7
1.2.4. Triggering 8
1.2.5. Calibration unit 9
1.2.6. Additional input 9
1.2.7. Power supply 14
1.2.8. Environmental Characteristics 14
1.2.9. Mechanical data 14
1.2.10. Optional outputs 14

2. CIRCUIT DESCRIPTIONS 15

2.1. Block diagram descriptions 15
2.1.1. Y-channel 15
2.1.2. Main time-base triggering 15
2.1.3. Main time-base circuit 16
2.1.4. Delayed time-base triggering 16
2.1.5. Delayed time-base 16
2.1.6. Storage circuits 17
2.1.7. Z Amplifier 17
2.1.8. Power supply 17

2.2. Description of the vertical section 18
2.2.1. Input coupling 18
2.2.2. Input attenuator 18
2.2.3. Impedance converter 18
2.2.4. Pre-amplifier 18
2.2.5. Trigger pick-off 19
2.2.6. Normal/Invert switch 19
2.2.7. Position control 19
2.2.8. Vertical control logic and electronic switch 19
2.2.9. Delay line driver 20
2.2.10. Final Y amplifier 20

2.3. Description of the time-bases 21
2.3.1. Main time-base triggering 21
2.3.2. Main time-base generator 23
2.3.3. Delayed time-base triggering 25
2.3.4. Delayed time-base generator 26

2.4. Description of the horizontal sections 30
2.4.1. X deflection selector and alternate time-base logic 30
2.4.2. X final amplifier 31

2.5. Storage circuits 32
2.5.1. Erase action 32
2.5.2. CRT grids 33
2.5.3. X-Y correction in auto store 36
2.5.4. View time 37
2.5.5. Variable duty-cycle generator 37

2.6. Cathode-Ray tube circuits 38
2.6.1. C.R.T. controls 38
2.6.2. Beam blanking amplifier 38
2.6.3. Storage blanking and intensity correction circuit 40
2.6.4. Calibration unit 40

2.7. Power supply unit 41
2.7.1. General 41
2.7.2. Mains rectifier circuit 41
2.7.3. The switching circuit 41
2.7.4. The regulator circuit 42
2.7.5. Switching-on and protection 42
2.7.6. Output circuits 42

3. DISMANTLING THE INSTRUMENT 43

3.1. Warnings 43

3.2. Removing the covers 43
3.2.1. Removing the carrying handle 43

3.3. Access to parts for checking and adjusting procedure 43

4. PERFORMANCE CHECK 44

4.1. General information 44

4.2. Preliminary settings of the controls 44

4.3. Recommended test equipment 45

4.4. Checking procedure 46

5. CHECKING AND ADJUSTING 53

5.1. General information 53

5.2. Recommended test equipment 53

5.3. Preliminary settings of the controls 53

5.4. Survey of adjusting elements and auxiliary equipment 54

5.5. Checking and adjusting procedure 58
5.5.1. Power supply 58
5.5.2. Storage 59
5.5.3. Cathode-ray tube circuit 60
5.5.4. Y-amplifier balance 60
5.5.5. Trigger balances 61
5.5.6. Time-base generators 62
5.5.7. Vertical channels 63
5.5.8. Triggering 67
5.5.9. X-deflection 69
5.5.10. Calibration voltage 70
5.5.11. Storage section 70

6. CORRECTIVE MAINTENANCE 73

6.1. Replacements 73
6.6.1. Replacing internal fuses 73
6.1.2. Replacing single knobs 74
6.1.3. Replacing double knobs 74
6.1.4. Replacing the delay-time multiplier knob 74
6.1.5. Removing the textplate 74
6.1.6. Removing the front assembly 75
6.1.7. Replacing the cathode ray tube 75

6.2. Soldering techniques 78

6.3. Trouble-shooting hints 78

6.4. Component location 79
6.4.1. Component location list amplifier unit 82
6.4.2. Component location list storage unit 88

6.5. Recalibration after repair 90

6.6. Instrument repackaging 90

7. PARTS LIST 92

7.1. Mechanical 93

7.2. Electrical 95

8. CIRCUIT DIAGRAMS AND P.C.B.'s 117

9. WIRING DIAGRAMS 137

Modifications 141

1. GENERAL INFORMATION

1.1. INTRODUCTION

The PM 3219 50 MHz Portable Dual-trace Storage Oscilloscope is a compact instrument, ergonomically designed to facilitate its extensive measuring capabilities, in laboratory, educational application and service areas.
The instrument provides both a main and a delayed time-base with provision for alternate time-base displays, comprehensive triggering facilities including peak-to-peak Auto, AC and DC coupling.
A large screen with internal graticule lines for easier viewing and a 8.5 kV accelerating voltage gives a high intensity trace with a well-defined spot.

Features

Summarising, the PM 3219 oscilloscope is characterised by the following features:

- 2 mV/div sensitivity at 50 MHz.
- Variable persistence.
- Auto erase with variable view time.
- "Baby-sit mode" in auto store operation.
- Variable brightness in read mode.
- Advanced design.

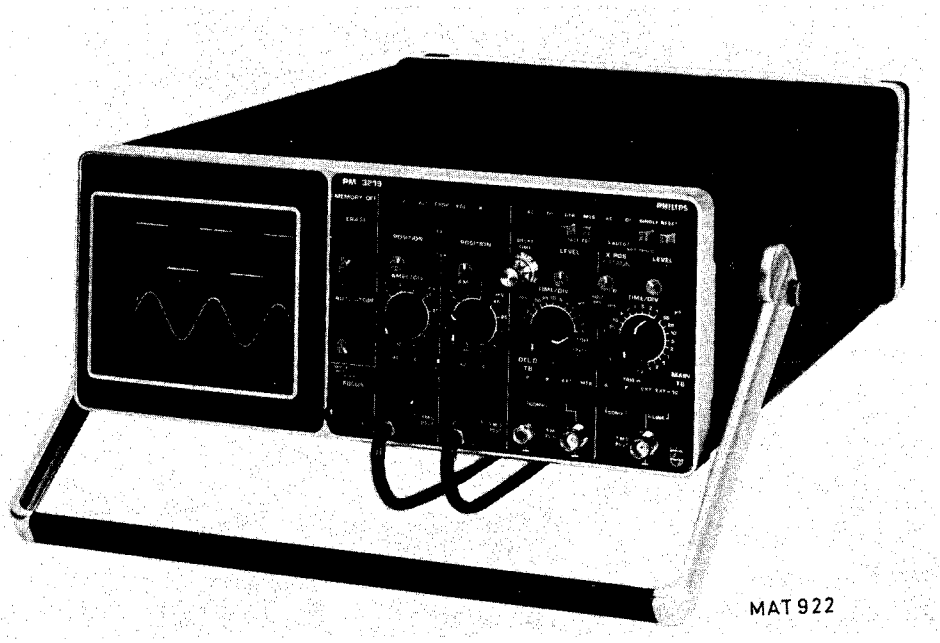

Fig. 1.

1.2. CHARACTERISTICS

The insulation between the oscilloscope and line (mains) fulfils the safety requirements of IEC-348 for metal-encased Class 2 instruments.
This instrument has been supplied in a safe condition. The present Operating Manual contains information and warnings that shall be followed by the purchaser to ensure safe operation and to retain the instrument in a safe condition.

- This specification is valid after the instrument has warmed up for 30 minutes (reference temperature 23 °C).
- Properties expressed in numerical values with tolerance stated, are guaranteed by the manufacturer. Numerical values without tolerances are typical and represent the characteristics of an average instrument.
- Inaccuracies (absolute or in %) relate to the indicated reference value.

Designation	*Specification*	*Additional Information*
1.2.1. C.R.T.		
Type	Storage tube	half–tone
Useful screen area	8 x 10 div.	1 division = 9 mm
Screen type	P31 phosphor	
Total acceleration voltage	8.5 kV	
Graticule	Internal	Black raster 0 % and 100 % reference lines at 1.5 and 6.5 divisions
Persistence:		
memory off	0.5 ms approx.	Natural persistence of P31 phosphor
write mode	between 0.5 ms and 30 s approx.	Continuously variable
View time	between 1 s and 10 s	Continuously variable
Writing speed :		
normal write	$\geqslant$ 0.2 div/μs	
max. write	$\geqslant$ 2 div/μs	
Storage time:		
normal write	$\geqslant$ 60 s	With max. persistence
max. write	$\geqslant$ 30 s	
read mode	$\geqslant$ 1 hour	With zero brightness
auto store mode	$\geqslant$ 24 hours	With no display
Erase time	1.3 s approx.	
Brightness (read mode)	Between 0 and 100 % of nominal intensity	
1.2.2. Vertical system		
Number of channels	2	Identical
Display modes	Channel A only	
	Channel B only	
	A and B chopped	
	A and B alternated	
	A and B added	
	A and B subtracted	Polarity of B inverted
Polarity inversion	Channel B	
Chopping frequency	500 kHz approx.	
Display time per channel	600 ns approx.	
Dynamic range	24 divisions	
Bandwidth	d.c. ... 50 MHz	d.c. coupled upper bandwidth limit –3 dB
	2 Hz ... 50 MHz	a.c. coupled –3 dB bandwidth limit

Designation	*Specification*	*Additional Information*
Risetime	7 ns approx.	
Pulse aberrations	± 3 % (5 % peak-peak)	Test pulse 6 div, rise time 1 ns
Deflection coefficients	2 mV – 10 V/div	1-2-5 sequence
Continuous control	1 : ⩾ 2.5	Uncalibrated
Vertical positioning	⩾ 16 div (± 8 div)	Referenced to screen centre
Input coupling	AC-0-DC	
Input impedance	1 MΩ // 20 pF	
Rated input voltage	42 V (dc + ac peak)	Test voltage 500 V (r.m.s.) According to IEC 348
CMRR	100:1 at 1 MHz	After adjustment at d.c.
Balance:		
Trace jump:		
– attenuator control	⩽ 0.1 div	
– 20 mV/div → 10 mV/div	⩽ 1 div	
– normal/invert	⩽ 1 div	
Drift	0.3 div per hour	At constant temperature
Visible signal delay	Viewing of leading edge is possible	
Deflection accuracy	± 3 %	
Add. auto store	± 2 %	

1.2.3. Horizontal System

Horizontal deflection can be obtained either from the main time-base, the delayed time-base, a combination of the two, or from the signal source selected for X-deflection. The last-mentioned facility permits X/Y diagrams to be displayed using channel A or B, the EXT. connector or the line (mains) as a signal source for horizontal deflection.

Display modes	Main time-base Main time-base intensified by DTB Delayed time-base MTB intensified and DTB, alternated X/Y operation	
Trace separation	MTB : 0 to +2 divisions DTB : 0 to –2 divisions	used in ALT TB mode
X Positioning range	Sweep start and 10th div. can be shifted to screen centre.	

1.2.3.1. Main Time-base

Modes	AUTO	In absence of trigger signal free-run after ≈ 200 ms
	AC or DC	
	SINGLE	NOT TRIG'D lamp glows after RESET and extinguishes at the end of the sweep cycle.
Time coefficients	0.5 s/div to 0.1 µs/div	1-2-5 sequence
Continuous control	1 : ⩾ 2.5	Uncalibrated
Magnifier	Calibrated x10 magnifier (extends maximum sweep speed to 10 ns/div)	

Designation	*Specification*	*Additional Information*
Accuracy		
Coefficient error x1	± 3 %	
Add. x10	± 2 %	First division excluded
Add. auto store	± 2 %	

1.2.3.2. Delayed Time-base

The delayed time-base either starts immediately after selected delay time or can be triggered after delay time by the selected time-base trigger source.

Time coefficients	1 ms/div to 0.1 µs/div in a 1-2-5 sequence	
Continuous control	1 : ⩾ 2.5	Uncalibrated
Accuracy		
Coefficient error x1	± 3 %	
Add. x10	± 2 %	
Add. auto store	± 2 %	
Delay time	Calibrated and continuously variable with ten-turn potentiometer between 0.1 and 9.9 divisions of the main time-base	
Incremental delay time error	± 0.5 %	

1.2.3.3. X-deflection

Mode	Channel A Channel B Extern or Extern ÷ 10 Line	
Defl. coeff. int.	In channel A or B selected by A or B AMPL/DIV switches	
ext.	0.2/div	
ext. ÷ 10	2 V/div	
line	⩾ 8 divisions	
Bandwidth (−3 dB):		
DC	d.c. to 1 MHz	
AC	5 Hz to 1 MHz	
Phase shift between X and Y ampl.	$\leqslant 3^{o}$ at 100 kHz	
Dynamic range	⩾ 24 div. upto 100 kHz	
Deflection accuracy	± 10 %	

1.2.4. Triggering

1.2.4.1. MTB triggering

Trigger source	Internal channels A or B Composite A and B External Ext ÷ 10 Line (mains)	
Slope	+ or −, or dual (+ or −)	
Trigger coupling	AC or DC	A.C. coupled in AUTO mode

Designation	*Specification*	*Additional Information*
Bandwidth:		
DC	d.c. to 50 MHz	
AC	5 Hz to 50 MHz	
AUTO	20 Hz to 50 MHz	
Sensitivity	Internal ⩽ 1 div. at 50 MHz	
	⩽ 0.75 div. at 5 MHz	
	External ⩽ 0.2 V peak-peak at 50 MHz	
	⩽ 0.15 V peak-peak at 5 MHz	
	EXT ÷ 10 ⩽ 2 V peak-peak at 50 MHz	
	⩽ 1.5 V peak-peak at 5 MHz	
	Dual twice nominal sensitivity upto 10 MHz approx.	
Level range	Auto related to signal amplitude	
	AC or DC ⩾ 16 div (± 8 div)	
	External ⩾ 3.2 V (± 1.6 V)	
	EXT ÷ 10 ⩾ 32 V (± 16 V)	
Ext. trigger input impedance	1 MΩ // 20 pF	
Rated input voltage	42 V (dc + ac peak)	Test voltage 500 V (r.m.s.) According to IEC 348

1.2.4.2. DTB triggering

Trigger source	Internal channels A or B	
	Composite A and B	
	External	
Slope	+ or –	
Trigger coupling	AC or DC	
Bandwidth:		
(–3 dB) DC	d.c. to 50 MHz	
(–3 dB) AC	5 Hz to 50 MHz	
Sensitivity	Internal ⩽ 2 div at 50 MHz	
	⩽ 0.75 div at 5 MHz	
	External ⩽ 0.2 V peak-peak at 50 MHz	
	⩽ 0.15 V peak-peak at 5 MHz	
Level range	Internal > 14 div (± 7 div)	
	External > 2.8 V (± 1.4 V)	
External trigger input impedance	1 MΩ // 20 pF	
Rated input voltage	42 V (dc + ac peak)	Test voltage 500 V (r.m.s.) According to IEC 348

1.2.5. Calibration unit

Amplitude	1.2 V (peak-peak)	
Amplitude accuracy	± 1 %	
Frequency	≈ 2 kHz (square-wave)	

1.2.6. Additional input

Z Modulation input	TTL-compatible	
	"0" = OFF mode	
	"1" = ON mode	
	(not connected = ON mode)	

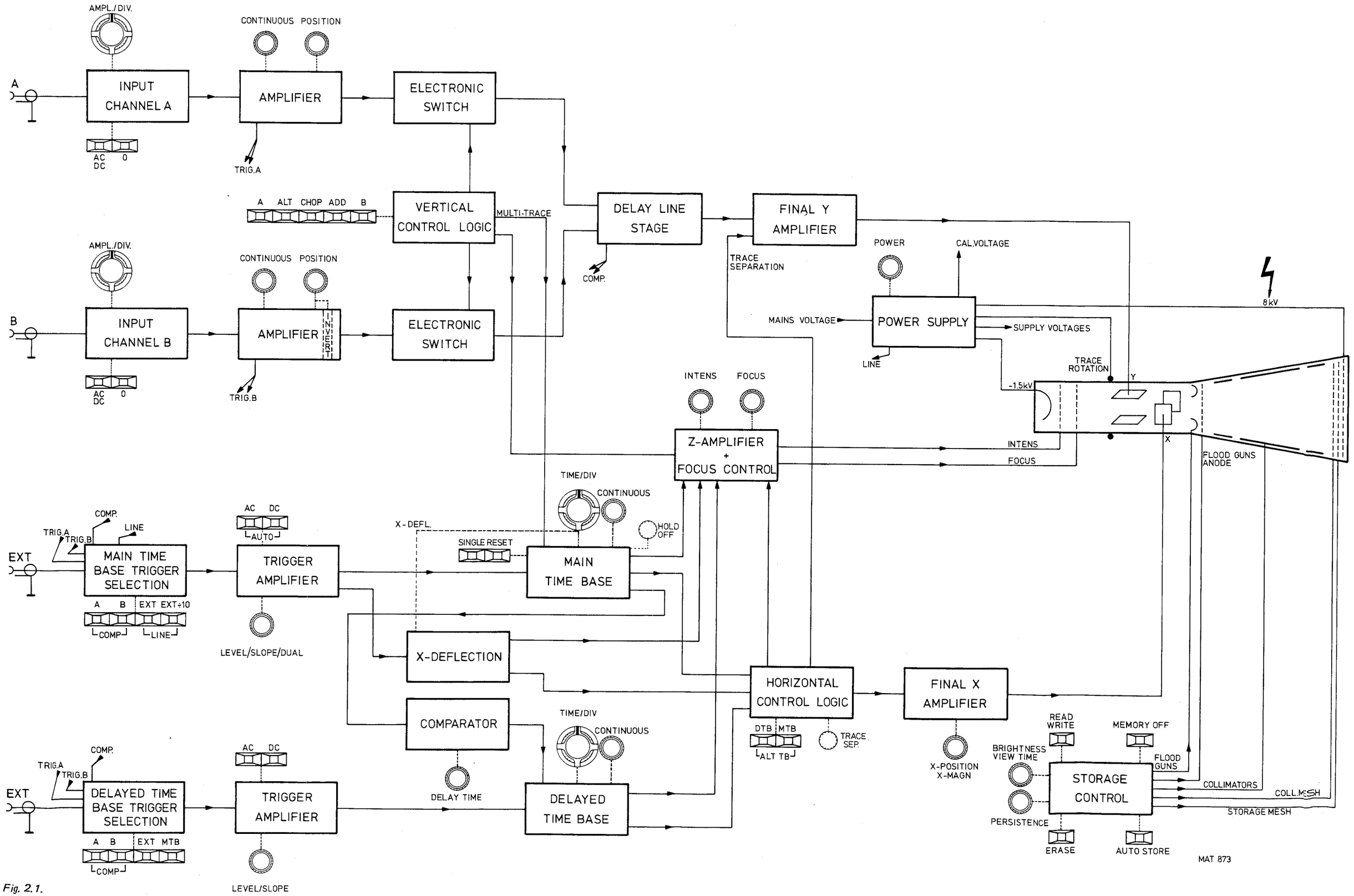
AMPL./DIV.
CONTINUOUS POSITION
A
INPUT CHANNEL A
AMPLIFIER
ELECTRONIC SWITCH
AC DC
0
TRIG.A
A ALT CHOP ADD B
VERTICAL CONTROL LOGIC
MULTI-TRACE
DELAY LINE STAGE
FINAL Y AMPLIFIER
COMP.
TRACE SEPARATION
POWER
CAL.VOLTAGE
8kV
AMPL./DIV.
CONTINUOUS POSITION
B
INPUT CHANNEL B
AMPLIFIER
INVERT
ELECTRONIC SWITCH
MAINS VOLTAGE
POWER SUPPLY
SUPPLY VOLTAGES
LINE
TRACE ROTATION
Y
-1.5kV
INTENS
FOCUS
Z-AMPLIFIER + FOCUS CONTROL
X
FLOOD GUNS ANODE
TIME/DIV
CONTINUOUS
HOLD OFF
COMP.
TRIG.A
TRIG.B
LINE
AC DC
AUTO
X-DEFL.
SINGLE RESET
MAIN TIME BASE TRIGGER SELECTION
TRIGGER AMPLIFIER
MAIN TIME BASE
EXT
A B EXT EXT÷10
COMP
LINE
LEVEL/SLOPE/DUAL
X-DEFLECTION
HORIZONTAL CONTROL LOGIC
FINAL X AMPLIFIER
COMPARATOR
TIME/DIV
CONTINUOUS
DTB MTB
ALT TB
TRACE SEP.
X-POSITION X-MAGN
READ WRITE
MEMORY OFF
BRIGHTNESS VIEW TIME
FLOOD GUNS
DELAY TIME
DELAYED TIME BASE TRIGGER SELECTION
TRIGGER AMPLIFIER
DELAYED TIME BASE
STORAGE CONTROL
COLLIMATORS
COLL.MESH
STORAGE MESH
A B EXT MTB
PERSISTENCE
ERASE
AUTO STORE
LEVEL/SLOPE
MAT 873

Fig. 2.1.

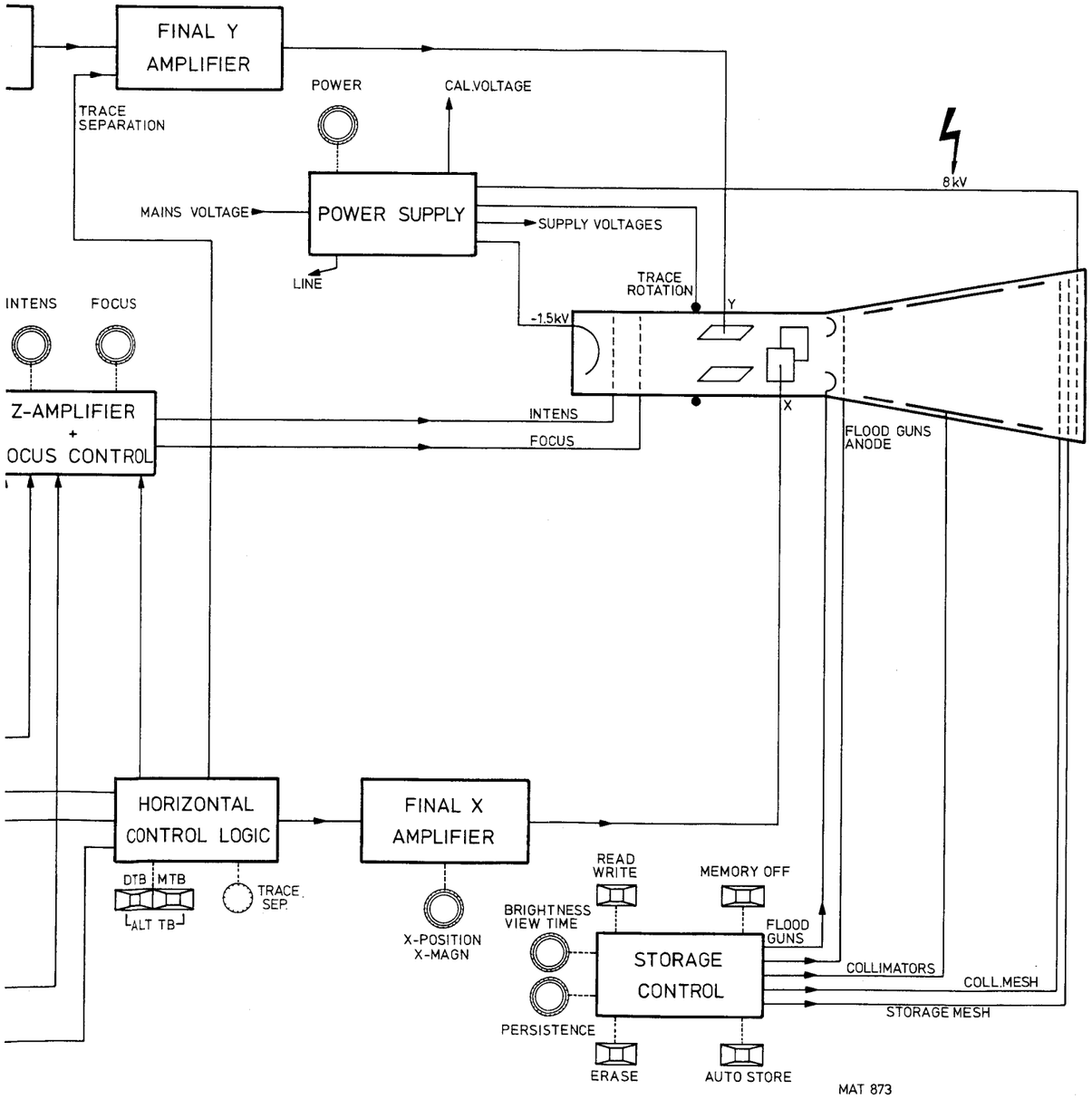

MAT 873

	Designation	*Specification*	*Additional Information*
1.2.7.	**Power supply**		
	Mains voltage (a.c.)	110 V, 220 V, 240 V	± 10 %
	Mains frequency	50-400 Hz ± 10 %	
	Power consumption	40 W	
	battery supply range	21-30 V	
	d.c. current rating	1.4 A approx.	

1.2.8. Environmental Characteristics

Note:
The characteristics are valid only if the instrument is checked in accordance with the official checking procedure. Details on these procedures and failure criteria are supplied on request by the PHILIPS-organisation in your country, or by N.V. PHILIPS' Gloeilampenfabrieken, TEST AND MEASURING DEPARTMENT, EINDHOVEN, THE NETHERLANDS.

Ambient temperature:	
Rated range of use	+5 °C to +40 °C
Operating range	−10 °C to +55 °C
Storage and transit	−40 °C to +70 °C
Altitude	to 5,000 m operating to 15,000 m non-operating
Humidity	21 days cyclic damp heat 25 °C to 40 °C, RH 95 %
Shock	300 m/s^2, (30 g), half sine-wave shock of 11 ms duration (3 shocks per direction for a total of 18 shocks)
Vibration	5-55 Hz, 15 minutes per direction, amplitude 0,7 mm (pk-pk) and 30 m/s^2 (3 g) accel.
Electromagnetic interference	Meets VDE 0871 and VDE 0875, (Grenzwert, Klasse B)
Safety	IEC 348, Class II
Recovery time	Operates within 30 min. of being subjected to −10 °C, soak, then taken into room conditions of 60 % relative humidity at +20 °C

1.2.9. Mechanical data

Dimensions and weight	Height 137 mm excluding feet Width 337 mm excluding handle Depth 486 mm exclusing handle Weight 97 N (9.9 kg)

1.2.10. Optional outputs

Main TB sweepout	−1.8 V to +3.8 V (± 0.5 V)
Gate out: MTB and DTB	High level ⩾ +2.4 V Low level ⩽ +0.5 V TTL compatible

2. CIRCUIT DESCRIPTIONS

In chapter 2.1. the block diagram description is given and in the chapters 2.2. - 2.7. the detailed circuit information is described.

2.1. BLOCK DIAGRAM DESCRIPTIONS (Fig. 2.1.)

This chapter serves to explain the main functions of the oscilloscope. The working principle is divided into the following sections:

2.1.1. Y-channel

The vertical channels A and B for the signals to be displayed are identical except for the invert facility included in the B channel amplifier.

Each channel comprises an input coupling switch, an input step attenuator and impedance converter, indicated by the block labelled 'INPUT CHANNEL'.

This stage is followed by a pre-amplifier with trigger pick-off (AMPLIFIER).
The AMPLIFIER stage also contains the continuous control of the AMPL/DIV switch and the POSITION control for vertical shift of the trace.

In the VERTICAL CONTROL LOGIC, a multivibrator is controlled by the display mode pushbuttons A, ALT, CHOP, ADD, B, to switch either channel A or B (ELECTRONIC SWITCHES) in the selected mode, via the DELAY LINE, to the FINAL Y AMPLIFIER.

In the CHOP mode, the channel multivibrator is free-running at a fixed frequency of approximately 500 kHz to drive the electronic switches alternately, then these ELECTRONIC SWITCHES are opened and closed successively, so that discrete parts of the signals of channel A and B are displayed in rapid succession, giving the appearance of two continuous traces.

In the ALT mode, the channel multivibrator is operated by a pulse at the end of the MTB sweep, and offers alternate uninterrupted display of the channel A and B waveforms.

In the ADD mode, both ELECTRONIC SWITCHES couple the signals through, thus adding channels A and B. By inverting the B channel amplifier (PULL TO INVERT B) the A - B mode is obtained.

The AMPL/DIV switch privides x1 or x10 gain control of the INPUT CHANNEL, which offers in conjunction with the step attenuator a full range of Y deflection coefficients in a 1-2-5 sequence.

2.1.2. Main Time-base Triggering

The pushbuttons associated with the MAIN TIME-BASE TRIGGER SELECTION circuit enable trigger signals to be derived from the A and B vertical channel amplifiers, from the main supply (LINE triggering) or from an external source (EXT or EXT ÷ 10).
Composite triggering (COMP = A and B depressed) is derived from the driver of the DELAY LINE STAGE.
The polarity of the trigger signal, negative or positive-going, on which the display will start is determined by the SLOPE control, which changes the output polarity of the TRIGGER AMPLIFIER.

With the AUTO switch despresed, the peak-to-peak level of the signal then determines the range of the LEVEL control.
With AC or DC selected, the range of the LEVEL control is fixed.
Selection of DUAL enables the display to be triggered on either the positive-going or the negative-going edge of the input signal. In the DUAL position the LEVEL is adjusted to zero.

2.1.3. Main Time-base Circuit

For normal internal time-base operation the MAIN TIME-BASE, via the HORIZONTAL CONTROL LOGIC, feeds the FINAL X AMPLIFIER.
When AUTO is selected (AC and DC depressed), in the absence of trigger signals, the time-base generator output is directly fed back via the hold-off circuit and gate to its input. This causes the sweep to free-run and a trace is always visible.
The AUTO mode can be used in all instances where the TRIG mode is valid, except for signals below 20 Hz or pulse trains with an off period exceeding 100 ms.
As soon as trigger pulses are available, the free-running state of the time-base generator is automatically terminated and normal triggering is resumed.

SINGLE sweep triggering is useful for observing effects that occur only once. In this event, it is often desirable that only one sawtooth is generated, even though several trigger pulses may be produced after the phenomenon of interest. When the SINGLE pushbutton is depressed, the first trigger pulse that appears triggers the MTB. The RESET pushbutton allows the SINGLE action to be set for the next event.

When either DC or AC is selected, AUTO is inoperative. Sweeps are then only procuded when a trigger signal is present and the LEVEL control is set correctly.

The hold-off circuit, as its name implies, 'holds off' trigger pulses from the MTB input until the flyback trace has completely returned and the time-base circuits are completely reset.

The TIME/DIV switch positions control the speed of the time-base sweep in a 1-2-5 sequence together with the uncalibrated continuous control.
Setting the TIME/DIV switch in the X DEFLECTION position inhibits the main time-base output of the FINAL X AMPLIFIER and permits horizontal deflection from another source.

2.1.4. Delayed Time-base Triggering

The pushbuttons associated with the DELAYED TIME-BASE TRIGGER SELECTION circuit enable trigger signals to be derived from the A and B vertical channel amplifiers, externally and from the MTB. Composite triggering on A and B is also available from the delay-line driver stage of the Y amplifier channels. AC and DC coupling is provided by the TRIGGER AMPLIFIER.
A LEVEL/SLOPE control for the DTB provides the same functions as that for the MTB circuit.

Selection of the MTB pushbutton enables the delayed time-base to start directly after the delay time determined by the setting of the DELAY TIME control on the COMPARATOR circuit.

2.1.5. Delayed Time-base

The DELAYED TIME-BASE is operative unless its TIME/DIV switch is in the OFF position, and starts immediately after the selected delay time, or on receipt of the first trigger pulse after the delay time.
In the COMPARATOR, the sawtooth signal derived from the MTB is compared with an accurately adjustable d.c. voltage, controlled by the ten-turn DELAY TIME potentiometer.
The comparator output produces the required delay pulse for the sweep-gating logic of the DTB generator to initiate the sawtooth voltage.
The delayed sweep is reset by the hold-off circuit of the DTB (end of sweep detection) or by the MTB.
After the start of the next main time-base sweep, the delayed sweep is started again by the output signal from the comparator.

When the MTB pushbutton of the horizontal deflection mode controls is selected, the part of the trace that coincides with the delayed sweep is intensified.

When the ALT TB mode is selected (pushbuttons DTB and MTB selected together) an electronic switch in the HORIZONTAL CONTROL LOGIC enables the MTB and DTB to be alternately traced on the screen, by switching the vertical channel bistable multivibrator.
The two displays can be separated by varying the voltage applied th the FINAL Y AMPLIFIER from the driver circuits of the electronic switch, using the front-panel TRACE SEPARATION control.

2.1.6. Storage Circuits

The STORAGE CONTROL circuits provide the voltage levels and waveforms that are necessary for the storage operation.
Retention of the stored signal on the memory mesh of the c.r.t., which carries the storage layer, is controlled by a variable duty-cycle square-wave generator. The duty-cycle depends on the PERSISTENCE control setting, and storage takes place in the WRITE position (released) of the READ/WRITE pushbutton.

The ERASE pushbuttons is only operative in the WRITE mode.

The AUTO STORE facility enables single-shot signals to be stored for very long periods (in excess of 24 hours).

The READ mode enables the captured signal to be stored for display. The signal display intensity can be varied by the BRIGHTNESS VIEW TIME potentiometer.

2.1.7. Z Amplifier

The Z AMPLIFIER is controlled by timing signals derived from the horizontal time-base channels to provide trace blanking of the c.r.t. during the flyback and hold-off time.
In addition, controlled by the vertical logic, it blanks the sweep during switching transients in CHOP mode.
Trace blanking from an external source is possible via the rear-panel socket Z-MOD IN.

The l.f. components of the blanking signal are modulated and demodulated (for voltage isolation purposes) before they are applied together with the a.d.-coupled h.f. voltage components to the Wehnelt cylinder.

2.1.8. Power supply

The power supply operates either from a.c. mains voltages of nominally 110 V, 220 V or 240 V, or optional from a d.c. source of 21 - 30 V.
A switched-mode circuit employing an integrated circuit provides smoothed d.c. outputs of +180 V, −180 V, +38 V, +5 V, +12 V, −12 V, +60 V, −60 V.

The EHT voltage for the accelerator anode of the c.r.t. is derived from a voltage quadrupler circuit taken from the converter transformer secondary circuit that supplies the −1500 V for the cathode of the c.r.t.

The CAL unit provided the calibration square-wave voltage.

2.2. DESCRIPTION OF THE VERTICAL SECTION

Vertical channels A and B for the signals to be displayed are identical, each comprising an input step attenuator, an impedance converter and a pre-amplifier with trigger pick-off facility.

The vertical control logic, selected by the front-panel display mode switch, switches either channel A or channel B to the final vertical amplifier via the delay line stage. From the final Y amplifier, the signal feeds the Y-deflection plates of the cathode ray tube.
The individual stages of the channel A vertical section are now described in detail.

2.2.1. Input Coupling

The vertical input signal applied to the BNC input socket X2 is fed to the attenuator via the input coupling switch S26 and the 0 switch S27. In the a.c. position of S26 the input is routed via capacitor C101 to block any d.c. component in the input signal. In the d.c. position of S26 the input signal is directly coupled to the attenuator. Resistor R101 provides a discharge path for the voltage across C101 to protect the circuit under test and S26 when switching from a.c. to d.c.
The 0 switch S27 separates the input signal from the input stage and earths the input stage for reference purposes; e.g. for calibration or for centreing the trace.

2.2.2. Input Attenuator

The input attenuator is a frequency-compensated, high-impedance voltage divider with twelve attenuation factors. The overall attenuation of the stage is determined by the combination of the various sections of two voltage dividers, selected by front-panel AMPL/DIV switch, S17.
Depending on the position of S17, the first section attenuates by a factor of 1,25; 3,125 or 6,25 and the second section by a factor of 1,10 or 100. The overall combinations of these factors allow nine different attenuation factors to be chosen. In addition, in the three most sensitive ranges, the gain of the pre-amplifier is increased by a factor of 10, giving a choice of twelve different factors in total.

The input capacitance of the attenuator cannot be adjusted in the individual positions, but is chosen in such a way that only small differences of less than 2 pF can occur.
Capacitor networks are provided in the voltage divider sections to make them frequency independent.

2.2.3. Impedance Converter

The impedance converter consists of two matched field-effect transistors U301 (BFS 21A) wired in a source-follower configuration. The output voltage of the attenuator and thus the gate voltage of the FETs is 16 mV/div and 1,6 mV/div respectively. To protect the input source-follower against excessive negative input voltages, diode V302 is connected from the gate to the negative line. The input FET itself is protected against excessive positive input voltage swings. In this impedance stage, the asymmetrical input signal is converted to a symmetrical signal, the d.c. balance being adjusted by means of R306.

2.2.4. Pre-amplifier

The input stage, formed by the five transistors of D301 and their associated components, is switched in a series-feedback and a shunt-feedback push-pull amplifier using direct coupling throughout.
In the positions 20 mV/div and above, of the AMPL/DIV switch, contact K301 is open and the gain is determined by:

$$\frac{R327 + R328}{R312 + R313} = 1{,}8x$$

If relay contact K301 is closed, the gain is increased by a factor of 10 because resistors R314 and R321+R322 are switched in parallel with R312+R313.
The accuracy can be adjusted by potentiometer R322.
To provide vernier control of the AMPL/DIV gain, front-panel potentiometer R8 (CAL) together with the network R323, R324 and R332 are switched between the series and shunt-feedback amplifiers. In the calibrated position where R8 is 1 kΩ, the network transfer is 0,85x. With R8 at minimum, the transfer will be 0,3x to give an attenuation of $\frac{0{,}85}{0{,}3} = 2{,}8x$.
The electronic channel switch (V316, V321) is controlled by a current input derived from the cascode circuit comprising V303, V304, V308, V312. The signal level at the input of this stage is approximately 24 mV/div,

giving an output current of:

$$\frac{24}{R342//(R343+R344)//(R348+R349+R350)} = 170\,\mu A/div$$

Potentiometer R347 in the A channel enables equalisation of both channels.

2.2.5. Trigger Pick-off

The trigger signal is picked-off from the emitters of transistors V303 and V304. The low-impedance output across these emitters drives the series-feedback stage consisting of V306 and V307. The symmetrical output signal from the collectors of V306 and V307 is applied via 50 Ω coacial cables to the main and delayed time-bases.

2.2.6. Normal/Invert Switch (channel B only)

Inversion of the Y signal is achieved by the 'PULL TO INVERT' switch S10 in the B channel. With the switch in the NORMAL position, the signal current flows via V408 and V412. In the INVERT position of S10, transistors V408 and V412 are blocked and transistors V409 and V411 become conductive. Potentiometer R476 serves to compensate for any posible unbalance between the two positions of S10.

2.2.7. Positon Control

The front-panel vertical POSITION control R2 gives trace positioning by controlling two transistors V313 and V314. Rotation of R2 effectively adds or subtracts current to or from the signal current.

2.2.8. Vertical Control Logic and Electronic Switch

The vertical control logic basically comprises front-panel pushbutton unit S2 and a flip-flop circuit, V501 and V504, which controls two electronic switches, one in each of the A and B channels.

The channel A switch consists of V316 and V321 with associated diodes V317, V318 and V319. When the common junction of the three diodes is positive with respect to earth, the diodes are blocked. In this state, the channel signal path via the transistors is conductive.
If the current drained from the diode junction exceeds 6 mA, the diodes become conductive and the transistors are turned off.

The switching action is as follows:

The front-panel pushbuttons allow five different modes of channel switching to be selected.

CHANNEL A : The base of flip-flop transistor V501 is connected to the -12 V line and is blocked. The collector of V501 goes high and blocks the switching diodes. Consequently, the signal transistors V316 and V321 conduct and channel A is switched on.

CHANNEL B : When channel B is selected, V504 is blocked which blocks the switching diodes in channel B to allow the signal transistors in channel B to conduct (see explanation for channel A).

ADD : Both the A and B channels are switched on and the signals are added. This is achieved by the open-circuit position of S2D which leaves the emitters of V501 and V504 floating. The collectors go high, therefore the switching diodes are blocked in both channels.

CHOP : In the CHOP mode, transistors V501 and V504 are switched as a 500 kHz oscillator, by means of two capacitors C504, C506 connected into the emitters by S2C.
During the switching transients in the CHOP mode, the c.r.t. is blanked by differential chopper blanking pulses fed to the Z amplifier.

ALT : In the ALT mode, channels A and B are alternately displayed. The ALT (alternate) switch is a dummy switch without contacts, but serves to release all other pushbuttons of the switch. Resistor R503 provides a d.c. path between the emitters of V501 and V503 which now acts as a bistable circuit. Thus one channel switching diode-network is conducting.

By means of the negative-going alternate pulse derived from the alternate time-base logic, the flip-flop will switch so that the other channel is displayed at the next time-base sweep.
In alternate time-base (ALT TB) mode , the circuit is switched at the end of every second sweep.
In the ALT mode, the transistor in the beam-blanking amplifier is blocked by applying -12 V via switch contacts S2A, S2C, S2D and S2E. Only control signals derived from the time-base circuits can now control the beam unblanking amplifier.

2.2.9. Delay Line Driver

The delay line is connected in the symmetrical signal path between a series-feedback and parallel-feedback push-pull amplifier consisting of the transistor network D601. The signal current of 170 μA/div is fed into R603 and R604, so that the input voltage of the series-feedback stage is 200 Ω x 0,17 mA/div = 34 mV/div.

In addition to resistors R618, R619, the emitter impedance of the series-feedback stage is formed by several RC networks. These networks are included to compensate for distortion generated by the delay line at high frequencies. Since the characteristic impedance of the delay line is 200 Ω, it must be similarly terminated at both ends. At the input, the impedance is formed by resistors R626 and R628. At the output, the correct termination is obtained with resistors R629 and R631, each of 86,6 Ω, together with the impedance across pins 2 and 4 of D601, which is 14 Ω.
If the MTB and DTB traces are displayed simultaneously, a horizontal trace shift is obtained by an extra voltage applied to the bases of D601 (2,4), derived from the trace separation circuit of the X amplifier.

2.2.10. Final Y Amplifier

The output voltage of the parallel-feedback stage D601 (1,2,3) and D601 (3,4,5) is applied to the series-feedback stage formed by parallel transistors V606+V607 and V608+V609.
Each pair of parallel-switched transistors is fed by a constant-current source V611. The gain of the final amplifier is adjustable by potentiometer R647.
In the 'auto store' mode, when the floodguns of the c.r.t. are switched off, the sensitivity of the c.r.t. slightly decreases. To compensate for this decrease the final amplifier gain is designed to increase; via a FET switch (V604) a supplementary potentiometer R642 is switched in parallel with R647 and can be adjusted to give the correct gain.

The gate voltages of V604 are:

auto store mode	+5 V
normal mode	−7 V

2.3. DESCRIPTION OF THE TIME-BASES

2.3.1. Main Time-base Triggering

The trigger source switches of the main time-base triggering circuit are capable of selecting the following sources:

- an internal signal derived from the channel A signal,
- an internal signal derived from the channel B signal,
- an internal signal alternately derived from the channel A and B signals (composite triggering),
- a signal derived from the mains frequency,
- an external signal applied to the external input socket.

All these signals may be used for both triggering and X-deflection purposes.

2.3.1.1. Source selection and pre-amplifier

The signal currents (60 μA/div) of one of the three trigger pick-off points are amplified by the shunt feedback stage consisting of V702 and its associated components and then buffered by emitter-follower V704 to give a level of 100 mV/div at the input of the impedance converter V717.
Zener diode V701 and transistor V703 are included to adapt the d.c. level of the signal.
The trigger signals not selected are connected to earth via the appropriate trigger source switches.
Depending on the selection of the EXT or EXT÷10 switch, the externally applied signal is attenuated by a factor of 2 or 20 to obtain an input sensitivity of 200 mV/div.

2.3.1.2. Impedance converter and trigger comparator

Via the AC/DC coupling switches (though C712 or direct), the 100 mV/div signal is fed to FET V717 which is switched in source-follower configuration. The output signal of the FET stage is applied to the slope selector circuit via an emitter-flolower, D701, and a common-emitter amplifier. Emitter-follower D701 is switched to act as a series feedback stage and serves to pick-off the signal for the X deflection and a signal for the auto triggering circuit. The maximum and minimum voltages at the gate of V717 are approximately ± 0,45V; the voltage at the other gate is 100 mV/div, thus giving a level range of ± 4,5 div. approximately.

The SLOPE switch S13 enables selection of positive or negative coupling of the trigger signal.
In the 'pull' position (negative slope), +12 V is applied to the anode of diode V726 and an earth is applied to the base of transistor V724. As a result, V724 blocks and the trigger signal flows through the upper part of the circuit. Diode V726 conducts and the positive trigger signal is connected to the +12 V supply.
After amplification in V728, the trigger signal is applied to the time-base logic.

With the SLOPE switch in the 'push' position (positive slope), V726 is blocked and the trigger signal flows through the lower part of the circuit. Transistor V724 now conducts and the path via V722 is blocked.

2.3.1.3. Peak-to-peak level detector

The trigger signal (300 mV/div) derived from the emitter-follower D701 (9, 10, 11) is amplified by V718 and applied to the junction of diodes V712, V713. The capacitors C709 and C711 are now charged to the peak-to-peak value of the trigger signal. This voltage is applied across the LEVEL potentiometer to define the limits of the level range.
If the AC or DC coupling switch is depressed instead of AUTO (AC + DC depressed), the voltage across the LEVEL potentiometer is now derived from the + and -12 V supply and ranging is possible over ±4 divisions.

In the DUAL position of the integrated switch S14 of the LEVEL potentiometer (fully clockwise), the wiper of potentiometer R7 is connected to earth and levelling is disabled. In addition, when DUAL is selected transistor V729 is driven into saturation by a positive potential on its base via R918, which results in the d.c. level of transistor V728 collector being adapted from 1,4 V to 1,9 V for correct driving of the next stage.

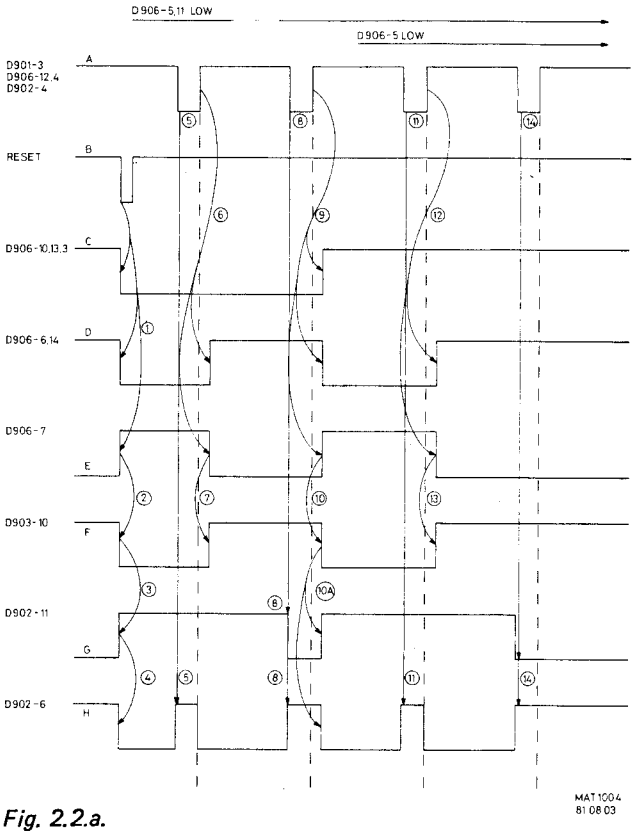

Fig. 2.2.a.

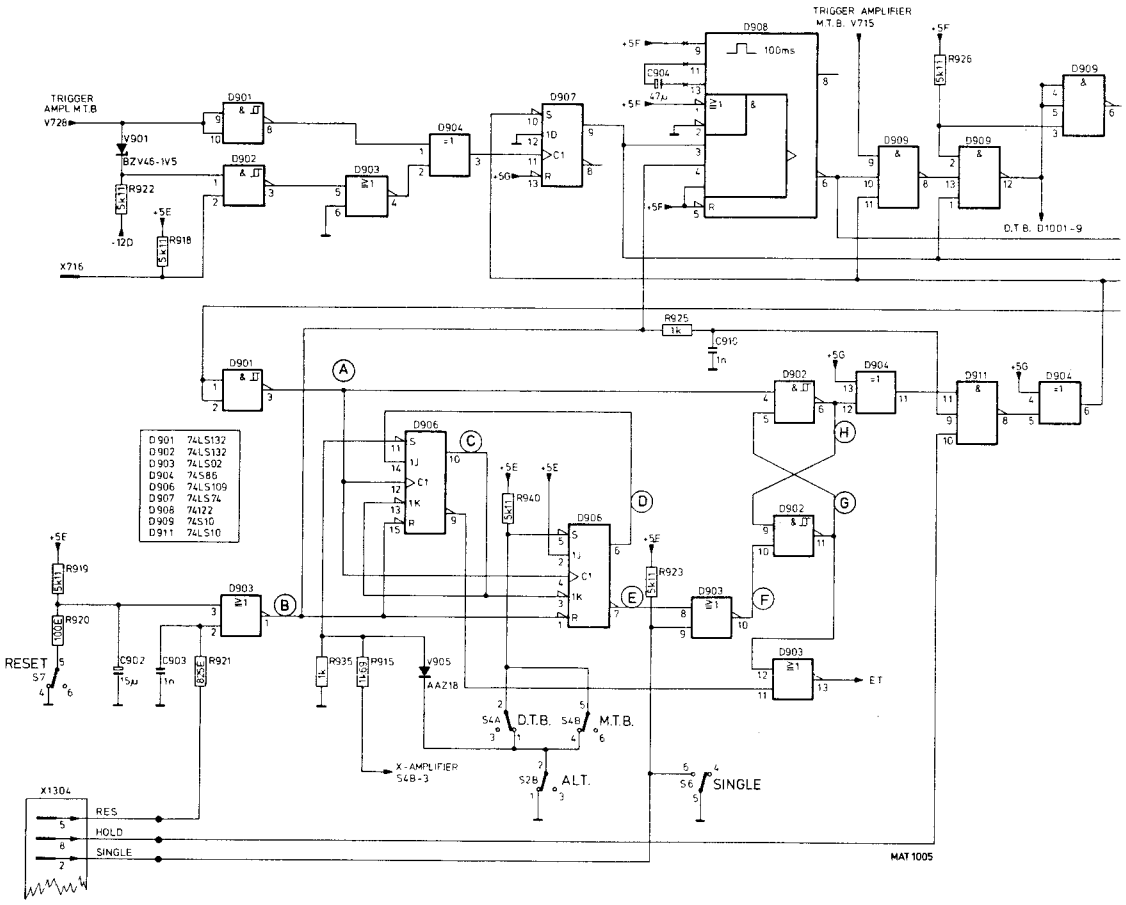

Fig. 2.2.b.

2.3.2. Main Time-base Generator

The main time-base generator (MTB) comprises sweep-gating logic, a sweep generator, a hold-off circuit and an auto sweep circuit.
Before considering these stages in detail, the general principle is briefly described. Basically, the sweep-gating logic, under the control of trigger signals from the trigger comparator and also feedback pulses from the hold-off circuit, supplies square-wave pulses to the switching transistor V904 of the sawtooth generator. The time-base capacitors (effectively in parallel with the switching transistor) are charged linearly through a constant-current source (V906) to provide the forward sweep, and are discharged rapidly by the switching transistor to provide the flyback period. The resulting sawtooth is fed via the X deflection selector to the X final amplifier.

2.3.2.1. Sweep-gating logic

In the normal position (not DUAL), Schmitt trigger D902 (1,2,3) is blocked by the low level on input 2. The d.c. voltage applied to Schmitt trigger D901 (8,9,10) is 1,4 V, i.e. the midrange of the gap of the Schmitt circuit (0,9 V...1,7 V). The output is applied to an exclusive-OR gate, D904 (1,2,3). As input 2 of this gate is low, the signal drives the clock input of flip-flop D907. The set input of this D-type flip-flop is controlled by a pulse derived from the hold-off circuit. If the hold-off period is over, and the oscilloscope is not in single-shot mode, the set input is high and the information at the D input (permanently at low level) is clocked on the output (9) on the receipt of a clock (trigger) pulse. This signal is applied to the bases of the two switching transistors (V903, V904) via two NAND gates. These gates are used to suppress the pulse when the X deflection mode is used.
In the DUAL position of the LEVEL potentiometer R7, the d.c. output level of the trigger amplifier is increased to 1,9 V, i.e. higher than the peak level of the Schmitt trigger gap. The Schmitt trigger D902 (1,2,3) is enabled by a high level on input 2. Now the levels at which the two Schmitt trigger circuits switch is chosen so that at both the positive or negative slope, a clock pulse (trigger pulse) drives D907.

2.3.2.2. Single-shot logic (Fig. 2.2.)

The logic circuit comprising D903, D906, D902 and associated components is used to preset the output of D907. This D-type flip-flop must be enabled once, twice or four times after RESET depending on the mode selected:

	D907 enabled
One channel SINGLE	once
ALT channels SINGLE	twice
One channel SINGLE + ALT TB	twice
ALT channels SINGLE + ALT TB	four times

The two J–K flip-flops D906 act as a counter and after 1, 2 or 4 times the flip-flop D902 is blocked and the set input of D907 remains low. The control (clock) pulses for the J–K flip-flops are derived from the hold-off signal, which is converted into a logic pulse by Schmitt trigger D901 (1,2,3). The timing is given in Fig. and occurs in the numerical sequence shown.

1) On depressing the RESET pushbutton, or after a reset pulse from the storage logic, the outputs of the two J–K flip-flops D906 are reset.
2) When the SINGLE pushbutton is depressed, input 9 of D903 is connected to a low level and the gate acts as an inverter.
3) Flip-flop D902 (4,5,6) (9,10,11) receives a reset pulse on input 10.
4) This reset pulse on input 10 causes output 6 to go low.
5) As input 5 of D902 is high, this gate acts as an inverter.
6) On the positive edge of the clock pulse, both outputs of D906 switch with respect to the propogation delay time.
7) Via D903 output 10, input 10 of D902 goes high, but with input 9 low, the output (11) does not change.
8) Gates D902 (4,5,6) and (9,10,11) now act as a flip-flop because input 10 is high, so the outputs switch.
9) After the propogation time, the outputs of the J–K flip-flops D906 switch.
10) As a result, input 10 of D902 goes low, so the flip-flop switches.

11)
12) } These actions are as for 5), 6), 7), except that output D906-10 now remains high.
13)

14) Gates D902 (4,5,6) and (9,10,11) act as a flip-flop again and switch output 6 high and output 11 low. Because the two J–K flip-flops D906 are now in a fixed position, input 10 of D902 remains high, which also holds this flip-flop fixed.

The three signals RES(et), HOLD and SINGLE are generated on the storage unit. The RES pulse is generated at the end of the ERASE action, the HOLD pulse is low during the READ mode and the SINGLE pulse is low during the AUTO STORE mode.
The 'single-shot logic' also generates the pulses BT (beginning of time-base) and ET (end of time-base) used in the storage unit. The NOT TRIG'D LED is controlled by this logic.

2.3.2.3. Main time-base sweep generator

The sweep speed or time coefficient is determined by the value of the time-base capacitance in circuit, and also by the magnitude of the charging resistor selected.
The time-base capacitors are C911 and C912. Capacitor C911 is always in circuit; C912 is selected by the transistor V908, which operates as an electronic switch and is either fully cut-off or fully conducting. It is switched on by the application of a positive voltage to its base from the TIME/DIV switch S23. According to the position of S23, this transistor V908 switches capacitor V912 in parallel with C911. As mentioned. the sweep speed is also dependent upon the magnitude of the accurate constant-current supplied by transistor V906. This current can be adjusted in steps by selecting the emitter resistance of V906 with the TIME/DIV switch S23. Continuous control of the charging current is solely determined by the calibrated emitter resistance.

To compensate for the temperature coefficient of this transistor, the base voltage of V906 is supplied via transistor V911. This also has the advantage of reducing the load on the TIME/DIV potentiometer R13. This transistor, in turn, has its base controlled by preset potentiometer R944 when the TIME/DIV switch S23 is in one of the 0,5 s/div ... 0,5 ms/div positions. This provides an adjustment for the timing circuit in the slower sweep speeds. In these positions the preset potentiometer R944 provides an additional measure of control over the base voltage of V906. In the positions of S23 when C912 is not in circuit, the diode V912 is blocked and the preset control R944 is inoperative.

The discharge circuit for the capacitors C911 and C912 consists of resistor R936 and transistor V904, this switching transistor being driven by the sweep-gating logic.
Transistor V903, the other switching transistor, short-circuits the charging current to earth when the time-base capacitors are being discharged. This means that the voltage across C911 and C912 is independent of the charging current at the moment that the sweep starts. Both switching transistors are driven with the same control signal, supplied by the sweep-gating logic.
The resulting sawtooth voltage is taken from two transistors V913 and V914 in a Darlington configuration. Capacitor C916 improves the transfer of faster sawtooth signals at the expense of the input impedance, which in that event does not need to be so high. The sawtooth voltage amplitude is approximately 5 V; this voltage is then fed via the X deflection selector to the X final amplifier.

2.3.2.4. Main time-base hold-off circuit

The hold-off circuit prevents the sweep-gating logic from responding to trigger pulses before the time-base capacitor has fully discharged. The sawtooth output from the Darlington pair V913, V914, is applied to the base of emitter-follower V917.
The switching transistor V909 switches the hold-off capacitor C913 in circuit in parallel with C914 according to the position of the TIME/DIV switch S23, in similar manner to that described for the time-base integrator timing capacitor. Capacitor C914 is always in circuit irrespective of the position of the TIME/DIV switch. Charging current for the hold-off capacitors is obtained via transistor V917.
When V917 cuts off, the discharge current flows through R956 and the front-panel HOLD-OFF control R11, which adjusts the discharge current to vary the hold-off time. The voltage across hold-off capacitor C914 or C913+C914 follows the sawtooth voltage fairly closely in a positive-going direction via emitter-follower V917. When a certain value is reached, integrated Schmitt trigger D901 reacts and the end of the sweep occurs. This is followed by a hold-off period in which the voltage across the hold-off capacitor decreases fairly slowly until the lower switching level of the Schmitt trigger is reached. The system can now be triggered again.

In the meantime, the time-base integrator timing capacitor C911 or C911+C912 has also reached its quiescent state. The output (3) of D901 is low during the hold-off time; at any other time this output is high.
If the output (D901-3) is low, then input D907-10 is low thus forcing D907-9 output to a high level.
Output 3 of D901 can be fed to input 10 of D907 or can be blocked depending on the state of the SINGLE mode (see Section 6.3.2.2).

2.3.2.5. The auto sweep circuit

In the absence of a trigger signal, a bright line should be displayed on the c.r.t. screen. The auto sweep circuit is responsible for this facility. The oscilloscope can be set in the AUTO free-run mode by pushing both the AC and DC pushbuttons of the MTB trigger-mode selector switch.
In the absence of a trigger signal, the output of the retriggerable monostable multivibrator (D908-6) remains high. NAND gate D909 (8,9,10,11) is now enabled to react on the pulse derived from the hold-off circuit (via D901-1,3, D902-4,6, D904-12,11, D911-11,8, D904-5,6) and the output goes low at the end of the hold-off period. Consequently, via D909-13,12 and D909-5,6, the switching transistors V903 and V904 are blocked, the time-base capacitance can therefore charge and the sweep starts.

2.3.3. Delayed Time-base Triggering

The trigger source switches for triggering the delayed time-base generator can select any of the following input sources:
- an internal signal from the vertical A channel,
- an internal signal from the vertical B channel,
- an internal composite signal from channel A and channel B,
- an internal triggering signal derived from the MTB to start the DTB immediately after the selected delay time.

Source selection is by trigger selector switch S30, which feeds the trigger signals to the trigger amplifier.

2.3.3.1. Delayed time-base trigger source selection and preamplifier

After selection of S30A and S30B, the signal currents (60 μA/div) of the three trigger pick-off stages are amplified to 150 mV/div by a shunt feedback stage + emitter-follower stage consisting of V801, V802 and V803.
Following this stage, switch S30C selects between this output signal and a signal from the external socket.
Signals that are not used are short-circuited to earth.
The externally applied signal is attenuated by a factor of 2, allowing the input impedance of the EXT socket to be standardised to 1 MOhm//20 pF.

2.3.3.2. Impedance converter and trigger comparator

The trigger signal of 150 mV/div is fed via the AC-DC coupling circuit to a FET (V808) wired in source-follower configuration. The output signal is applied via an emitter-follower, D801 (6,7,8) and a common-emitter amplifier, D801 (3,4,5) to the ± slope selection circuit.

The SLOPE selection switch S11 enables triggering on either the positive-going or the negative-going edge of the triggering signal.
From the slope selector circuit, the signal is fed to the output shunt feedback amplifier V816.
The range of the LEVEL control is fixed. The d.c. voltage on the wiper of LEVEL control R5, which is fed to the FET V808, can vary between +12 V and -12 V. At a signal level on the gate of the other FET of 150 mV/div, there is a control range of ± 8 divisions.

2.3.4. Delayed Time-base Generator

The delayed time-base generator comprises sweep-gating logic, the sweep generator and end of sweep detection circuit, the delay-time function, and a comparator circuit.

Before considering these stages in detail, the general principle is briefly described.
Basically, the sweep-gating logic, controlled by trigger signals from the trigger comparator and also feedback pulses from the hold-off circuit, supplies square-wave pulses to the switching transistor V1014 of the sawtooth generator. The time-base capacitors (effectively in parallel with the switching transistor) are charged linearly through constant-current source V1011 to provide the forward sweep, and are discharged rapidly by the switching transistor to provide the flyback period. The resulting sawtooth waveforms is fed via the X-deflection selector to the X final amplifier.

2.3.4.1. Delayed time-base sweep generator

The sweep speed or time coefficient is determined by the value of the time-base capacitance in circuit, and also by the magnitude of the charging resistor selected.
The time-base capacitors are C1009 and C1011. Capacitor C1009 is always in circuit;
C1011 is selected by transistor V1014, which operates as an electronic switch, which is either fully on, or fully off. It is switched on by a positive base voltage from the TIME/DIV switch S21, to switch C1011 in parallel with C1009. As mentioned, the sweep speed also depends on the magnitude of the accurate constant-current supplied by transistor V1011. This current can be adjusted in steps by selecting the emitter resistance of V1011 with the TIME/DIV switch S21. The continuous sweep control, TIME/DIV potentiometer R10 varies the base drive to V1011 to enable continuous control of the charging current. In the CAL position of this potentiometer switch S22 closes and the charging current is solely determined by the selected calibrated emitter resistor.
To compensate for the temperature coefficient of the transistor, the base voltage of V1011 is supplied via transistor V1013. This also has the advantage of reducing the load on the TIME/DIV potentiometer R10. In turn, V1013 is base-controlled by preset R1042, and by preset R1037 alone when TIME/DIV switch S21 is in one of the 20 µs/div ... 1 ms/div positions. Potentiometer R1037 enables the sweep speeds of the delayed time-base generator to be equalised to those of the MTB generator. This provides a fine adjustment for the timing circuit in the slower speed speeds. In these positions, the preset R1042 provides an additional measure of control over the base voltage of V1013.
In the positions of S21 when C1011 is not in circuit, diode V1016 is blocked and the preset control R1042 is inoperative.
The discharge circuit for the capacitors C1009 and C1011 consists of resistor R1031 and the switching transistor V1012, which is driven by the sweep-gating logic.
The resulting sawtooth voltage is taken from two transistors V1017 and V1018 in a Darlington configuration. Capacitor C1012 improves the transfer of faster sawtooth signals at the expense of the input impedance which, in this event, does not need to be so high. The sawtooth voltage, of amplitude +5 V approx., is then fed via the X-deflection selector to the X-final amplifier.

2.3.4.2. Delayed time-base end of the sweep detector circuit

This circuit prevents the sweep-gating logic from responding to trigger pulses before the time-base capacitor has fully discharged. The sawtooth output from the Darlington circuit V1017 and V1018 is applied to the base of emitter-follower V1021.
When the emitter of V1021 has reached a certain value, integrated Schmitt-trigger D reacts and the end of the sweep is initiated.
This is followed by a period in which the sawtooth voltage decreases until the lower switching level of the Schmitt-trigger is reached. The flip-flop formed by the two NAND-gates can now be reset by the signal from point 8 of NAND D1002 (8-9-10) i.e. at the end of the main time-base gate.
During one sweep of the main time-base, only one sweep of the delayed time-base can be generated.
The DTB sweep is always reset at the end of the main time-base sweep via the main time-base gate signal.
The system can now be triggered again.

2.3.4.3. Delay time function

The function of the front panel, ten-turn DELAY TIME potentiometer R4 is to provide an adjustable d.c. voltage for comparison with the sweep voltage of the main time-base generator. This comparison is then used to start the delayed time-base generator at a pre-determined time during the sweep of the main time-base.

2.3.4.4. Comparator circuit

The comparator consists of the transistors V1003 and V1006 fed from a constant-current source V1004.
The d.c. voltage set by the DELAY TIME potentiometer R4 is fed to the base of the left-hand transistor V1003 via emitter-followers V1001 and V1002.
The sawtooth voltage of the main time-base generator is fed to the right-hand transistor V1006. As soon as the amplitude of the sawtooth exceeds the set d.c. voltage, the collector voltage of the right-hand transistor V1006 drops. This voltage drop is fed via inverter V1007 to the delayed time-base sweep-gating logic. The circuit is switched off in the OFF position of the DTB TIME/DIV switch S21 by interrupting the +12 V supply to R1022, consequently switching off the base of V1004.

2.3.4.5. Delayed time-base sweep-gating logic

The delayed time-base sweep-gating logic which consists of TTL logic elements is controlled by the following circuits:
The TTL circuit D1001 contains 2-input NAND-gates with Schmitt-trigger properties. Logic element D1002 contains normal 2-input NAND-gates and D907 contains two D-type flip-flops.

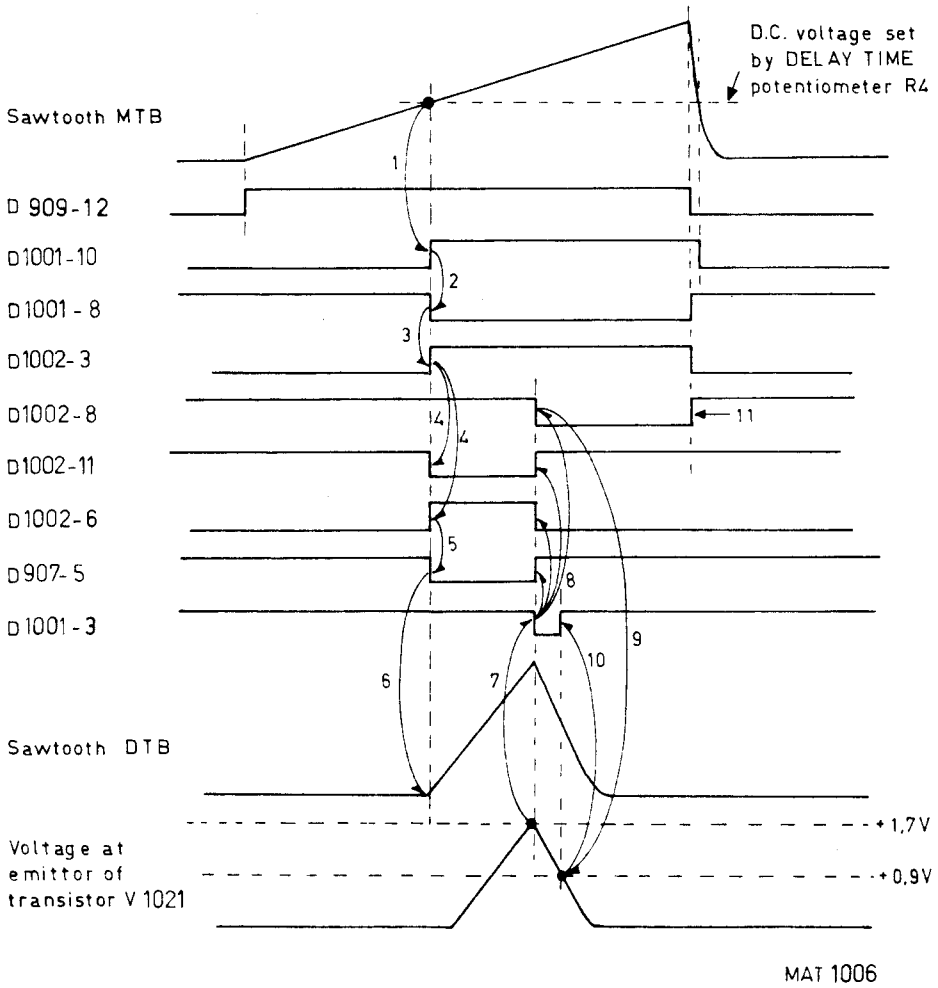
D.C. voltage set
by DELAY TIME
potentiometer R4
Sawtooth MTB
D 909-12
D1001-10
D1001-8
D1002-3
D1002-8
D1002-11
D1002-6
D907-5
D1001-3
Sawtooth DTB
Voltage at
emittor of
transistor V 1021
+1,7V
+0,9V
1
2
3
4
5
6
7
8
9
10
11
MAT 1006

Fig. 2.3.

Relating to the numerical sequence of Fig. 2.3.:

1) Comparing the main time-base sawtooth signal with the d.c. voltage set by the DELAY TIME potentiometer R4 results in a positive-going signal at the input 10 of Schmitt-trigger D1001.

2) Only during a main time-base sweep, will the MTB gate at the input 9 of Schmitt-trigger D1001 be at logical 1 level. The output (point 8) of this Schmitt-trigger will go to logical 0 level on the positive-going edge of the comparator output signal to input 10 of D1001.

3) The output signal of the Schmitt-trigger is inverted in NAND-gate D1002 (output 3).

4) Assume that output 8 of the flip-flop formed by the two NAND-gates is at logical 1 level. Then the output 11 of D1002 will go to logical 0 level and the input 4 of D-type flip-flop D907 to logical 1 level.

5) The switches S30A, S30B and S30C are closed in the MTB trigger mode and therefore input 1 of D-type flip-flop D907 is set to logical 0 level. In this situation the D-type flip-flop part between input 4 and output 5 will act as an inverter.

6) Output 5 of D907 goes to zero level and this signal is applied to switching transistor V1012 and causes the sweep to start.

7) The end of the sweep is reached when the signal at the emitter of transistor V1021 exceeds the upper switching level (+1,7 V) of the hold-off Schmitt-trigger. The output (D1001, point 3) of this Schmitt-trigger then switches to logic 0 level.

8) The output of the flip-flop formed by the two NAND-gates is now set to 0 level.

9) The voltage at the emitter of transistor V1021 decreases slowly until the lower switching level (+0,9 V) of the Schmitt-trigger is reached.

10) This is the end of the hold-off period.
The output (D1001, point 3) of the hold-off Schmitt-trigger rises again to 1.

11) At the end of the MTB sweep, the output 8 of the flip-flop formed by the two NAND-gates is switched to logic 1 level and the system can be triggered again.

A, B or EXT triggering

If one of the DTB trigger source selector switches A, B or EXT is selected, the level at input 1 of the D-type flip-flop D907 will go to logical 1 level.
The D-type flip-flop can now only be set to zero by means of a trigger signal from the delayed time-base trigger comparator which is applied to the clock-pulse input of the flip-flop.

2.4. DESCRIPTION OF THE HORIZONTAL SECTIONS

2.4.1. X deflection selector and alternate time-base logic

Depending on the selected position of the source selector switches, the circuit provides for X deflection by the MTB signal, the DTB signal, a signal from an external source of X deflection by one of the internal signals derived from channel A, channel B or the mains voltage.
The source selector is described according to the mode selected.

MTB : In this position of switch S4, the +12 V supply is routed via the contacts of S4A and via diode V1111 to the base of transistor V1118, which results in a collector voltage of -1,7 V. This voltage is routed as a blocking potential to the junction of the two diodes V1119, V1121, and there is no signal path for the DTB output sawtooth signal to the X final amplifier.
At the same time, the other transistor (V1117) of the alternate flip-flop conducts and its collector voltage is +10,5 V approx. This voltage is applied to the junction of the diodes V1114, V1116, which conduct and provide a path for the output sawtooth signal of the MTB to the X final amplifier.
This means that the MTB sawtooth signal is fed to the X final amplifier, but not the DTB sawtooth signal or the X deflection signal.

DTB : In this position of switch S4, the +12 V supply is routed via the contacts of S4A and S4B and via diode V1107 to the base of transistor V1117. This results in a voltage of -0,7 V on the collector of V1117 and a voltage of +10,5 V on the collector of V1118. The diodes V1114 and V1116 are blocked and there is no signal path for the MTB output sawtooth signal to the X final amplifier.
A signal path is now provided via the diodes V1119, V1121, for the DTB output sawtooth signal.
With DTB selected, the MTB signal and the X deflection signal are blocked.

X DEFL : In the X DEFL position of switch S23, the +12 V potentials are fed to the bases of transistors V1117, V1118 via transistor V1104. Both collector voltages are at -3,9 V and the diodes V1114, V1119 and V1121 are blocked. Thus, the signal paths for the MTB sawtooth signal as well as for the DTB sawtooth signal are blocked.
At the same time, inputs 3 and 2 of D909 are low, so the output is blocked and the switching transistor V903 and V904 remain conductive. In the sweep-gating logic, a 0 V signal is applied to the input 2 of D909 and as a result, a 0 V is fed to the Z amplifier. This means that the trace will be totally unblanked. The X deflection signals are transmitted to the X final amplifier via transistor V1132 as described for the X final amplifier.

ALT TB : With both pushbuttons S4A and S4B depressed, the oscilloscope is set in the alternate time-base mode and the MTB and DTB are selected alternately. In this mode there is no +12 V applied to the bases of V1117 and V1118, the alternate circuit operates as a bistable and one of the diodes V1108, V1109 is conductive at a time. MTB-gate pulses from the MTB generator are fed to the junction of diodes V1108, V1109 to switch the circuit at the end of each MTB sweep, which results in the MTB and DTB being alternately selected.
The collector signal of transistor V1118 is fed to the junction of diodes V1119 and V1121 to block or open the DTB signal path and the collector signal of transistor V1117 is fed to the junction of diodes V1114 and V1116 to block or open the MTB signal path.
These collector signals are also fed to the trace separation circuit, which allows an adjustable trace separation potential to be alternatively applied to the two paths of the vertical final amplifier depending whether MTB or DTB is selected by the alternate flip-flop. Trace separation is adjustable by front-panel control R12. The trace separation potentials are routed from the collector or V1126 via R638 and from collector of V1128 via R632 to the vertical amplifier.

The generation of switching pulses for the channel multivibrator depends on the selection of ALT and ALT TB.

- With ALT TB not selected and ALT selected, negative-going pulses derived from the MTB gate are routed directly from R1113 to the channel multivibrator to switch the A and B channels alternately.
- With ALT TB selected and ALT mode not selected the signal path from R1113 to the channel multivibrator is blocked by a +12 V signal applied via switch S4B to R1132. Transistor V1122 conducts if ALT is not selected because a 0 V signal is fed to R1114 via R507 and the alternate signals from the switching of the alternate flip-flop are blocked.
- With ALT TB as well as ALT selected, the signal path from R1113 to the channel multivibrator is blocked by a +12 V signal applied via S4B to R1132. Transistor V1122 is not conducting now because a -12 V signal is fed to its base via S2A, S2C, S2D, S2E and R1114. Negative-going alternate pulses derived from the alternate time-base logic are fed to the channel multivibrator. These pulses appear at the end of every two MTB sweeps.

2.4.2. X Final Amplifier

Transistor V1204 is driven by the MTB generator via diodes V1114 and V1116 when R1111 is kept at +12 V level or by the DTB generator via diodes V1119 and V1121 when R1126 is kept at +12 V level, or the amplifier stage V1132 when R1146 is at +12 V via the TIME/DIV switch S23 (X DEFL).
Transistor V1132 receives its input signal from D701-8 of the trigger amplifier. This signal is derived from one of the sources, channel A, channel B, line or external, depending on the switch setting of S31.
The X final amplifier comprises two amplifier stages in parallel, one for each deflection plate. Only one half is described.

The amplifier proper is the cascode circuit, transistors V1212 and V1213. The feedback resistors are R1233 and R1236. Bias current for the amplifier is supplied by transistor V1208. Zener diodes V1209 and V1211 ensure that the average voltage on the deflection plate is maintained at +26 V. Capacitor C1206 improves the h.f. response.
The final stage is supplied from the +180 V and -180 V rails because the X plates of the c.r.t. are mechanically displaced such that they are less sensitive than the Y plates.
The cascode amplifier stages are controlled via transistors V1203 and V1204.
The bias of transitor V1203 can be varied with the X POSITION potentiometer R6, which consists of a tandem potentiometer with back-lash giving a fine vernier control. Bias variations cause the balance of the amplifier to be disturbed, resulting in horizontal trace shift on the screen.
Before the signal is applied to the final stage, it is attenuated by R1223, R1224 if the FET V1206 conducts. This FET is conductive in the normal mode, i.e. the gate is controlled by 17 V approx.
In AUTO mode, the flood gates of the c.r.t. are switched off, so decreasing the sensitivity, and the gain of the final amplifier is increased by driving the FET with 0 V so that it blocks.

The X amplifier permits choice of X deflection by the time-base signals or one of the sources, channel A, B, line or an external signal. The deflection source is selected by mode selector switch S31 and the X deflection position of the TIME/DIV switch S23.
The gain of the X amplifier may be either nominal (x1 position of XMAGN switch S12) or increased by a factor of ten (x10 position of XMAGN). In the x10 position, the emitter resistance R1212+R1217 of transistors V1203 and V1204 is shunted by resistors R1213+R1216, reducing the value by a factor of ten.

The x1 gain can be set by preset R1217 and the x10 gain by R1216. When XDEFL is selected, the x10 gain is automatically operative.
Both outputs of the X final amplifier are connected, one to each X deflection plate of the c.r.t.

2.5. STORAGE CIRCUITS

2.5.1. Erase Action

During the erase action the following pulse waveforms are applied to the storage mesh G9, the collimators G71, G72, G73, the collector mesh G8, the flood-gun anode and the flood-gun cathode.

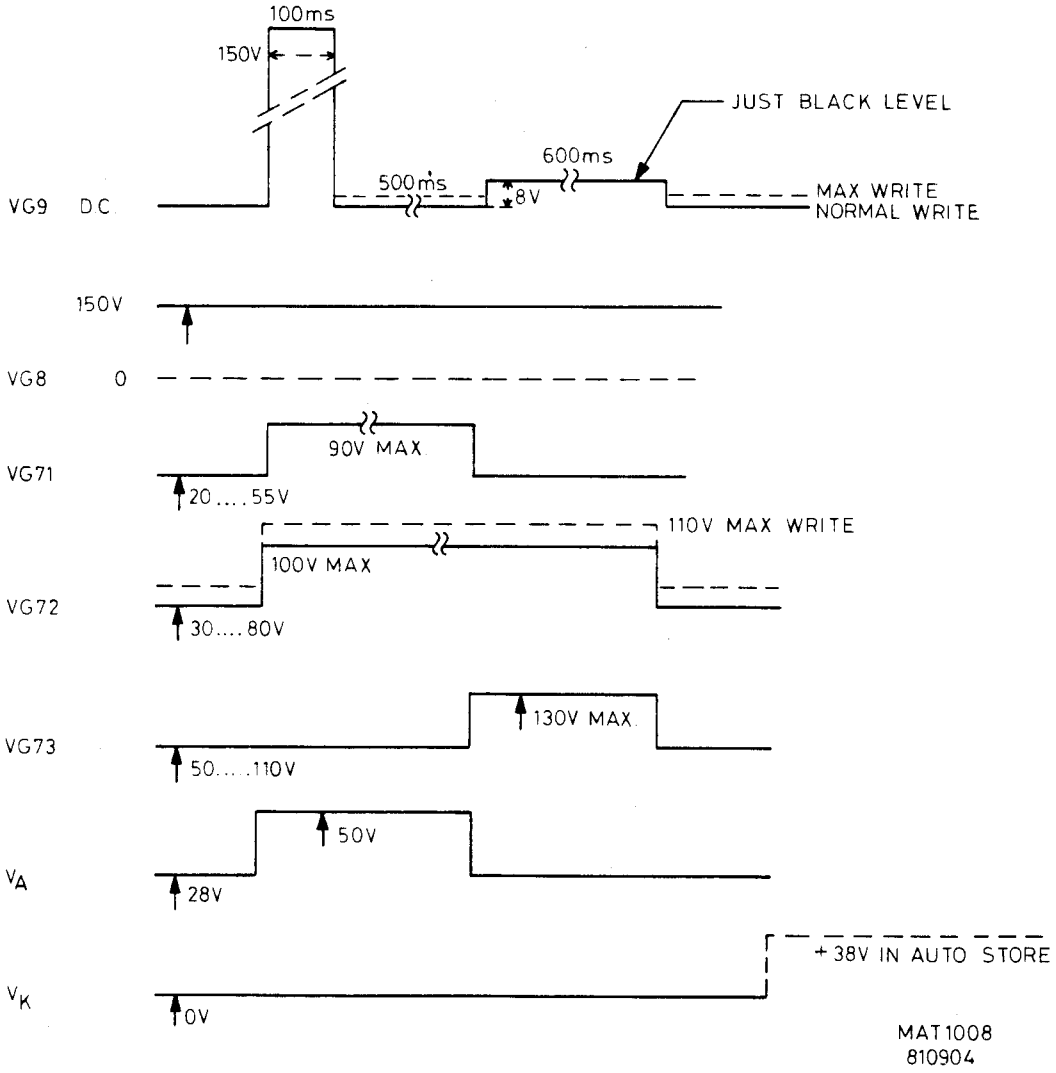

Fig. 2.4.

2.5.2. CRT Grids

2.5.2.1. The Storage Mesh G9

The voltage applied to the storage mesh G9 is generated as follows:

The final amplifier consisting of the long-tailed pair V1367 and V1368 is driven by several inputs via diode switches, as shown in the simplified diagram.

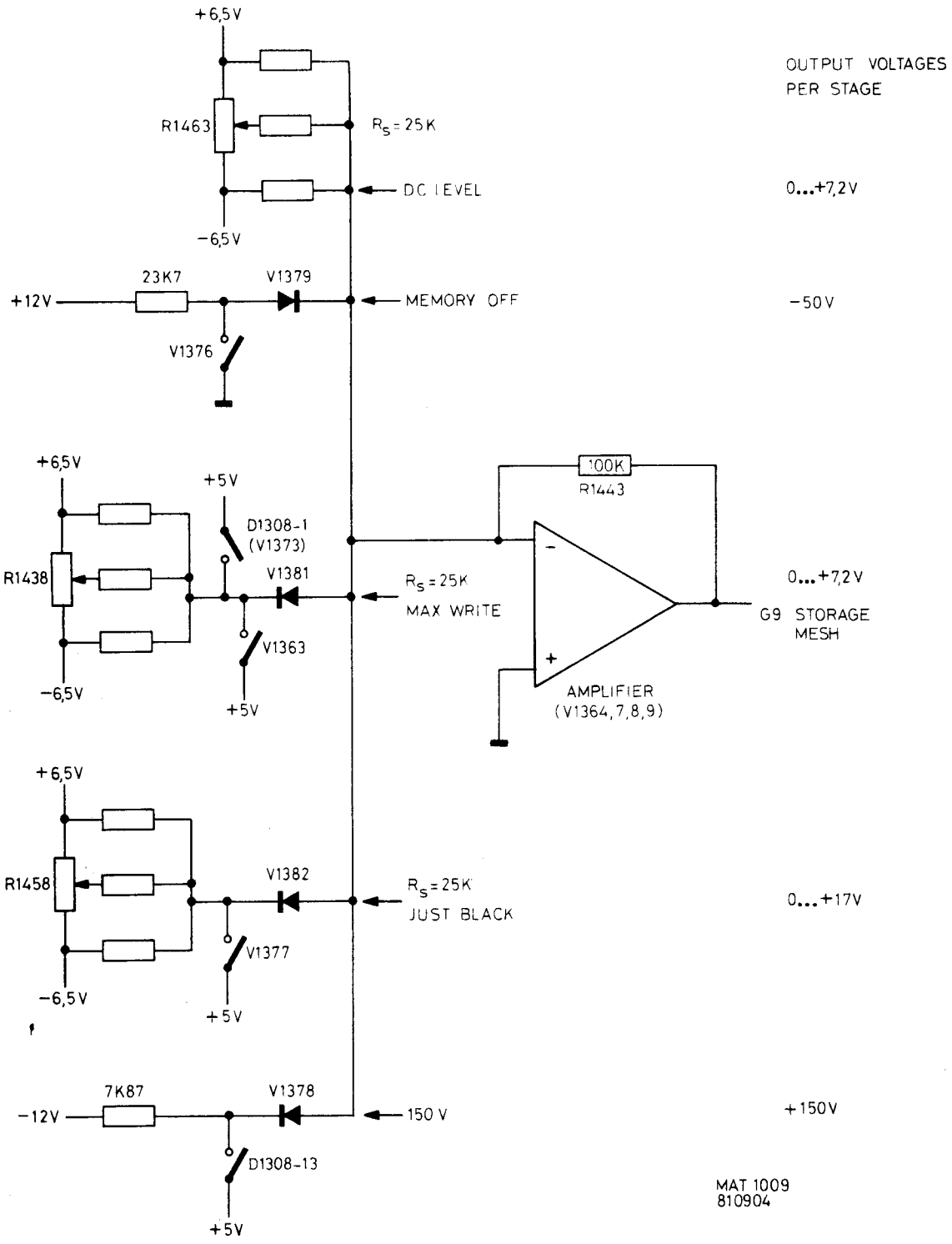

Fig. 2.5.

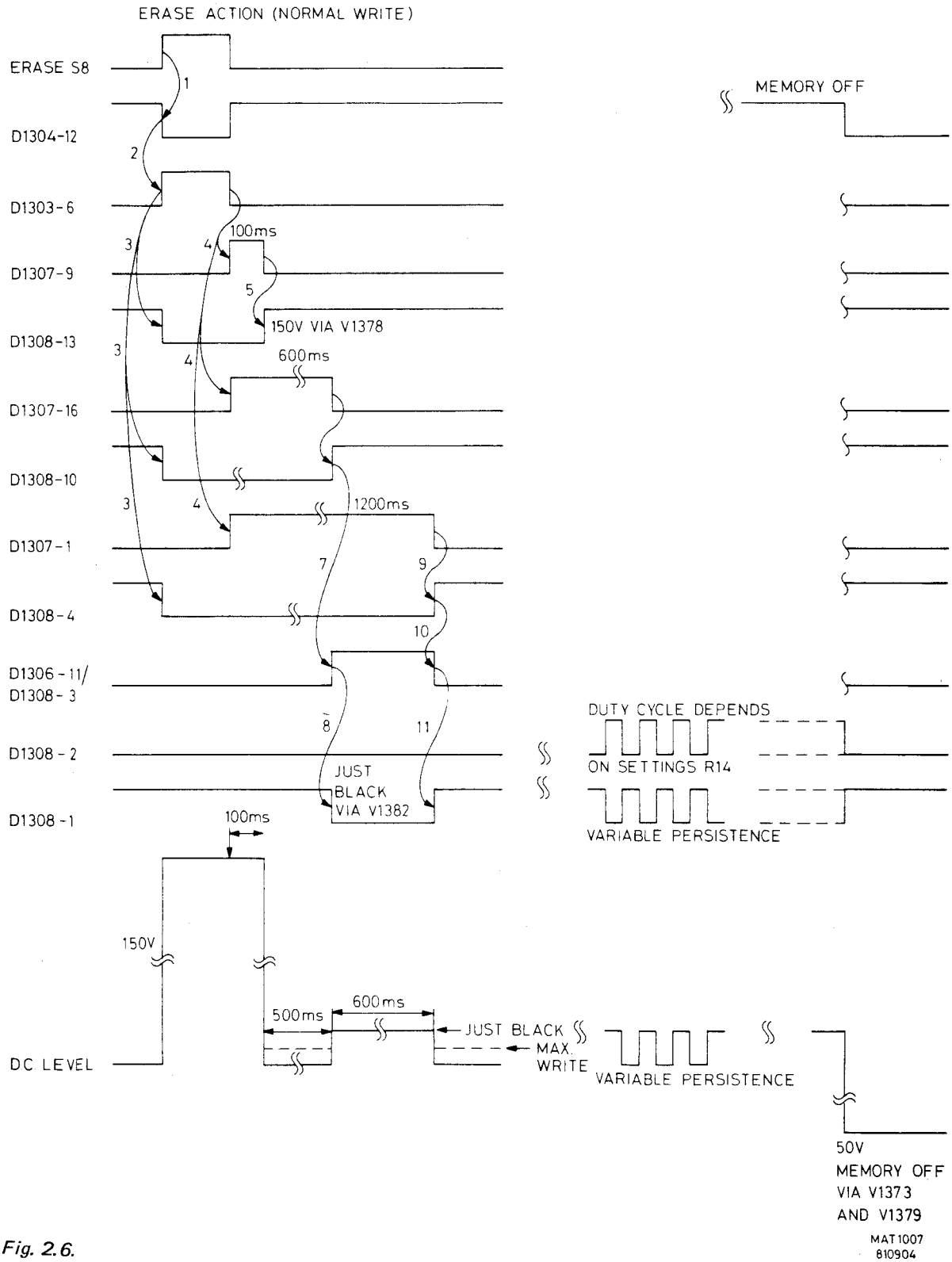
ERASE ACTION (NORMAL WRITE)
ERASE S8
D1304-12
D1303-6
D1307-9
D1308-13
D1307-16
D1308-10
D1307-1
D1308-4
D1306-11/
D1308-3
D1308-2
D1308-1
DC LEVEL
1
2
3
4
5
7
8
9
10
11
100ms
150V VIA V1378
600ms
1200ms
JUST
BLACK
VIA V1382
MEMORY OFF
DUTY CYCLE DEPENDS
ON SETTINGS R14
VARIABLE PERSISTENCE
100ms
150V
500ms
600ms
JUST BLACK
MAX.
WRITE
VARIABLE PERSISTENCE
50V
MEMORY OFF
VIA V1373
AND V1379
MAT1007
810904

Fig. 2.6.

a) D.C. level

As shown in the circuit diagram, the adjustable d.c. level is always in circuit.
At the amplifier output the R1463 potentiometer gives a variation from 0 V to +7,2 V. The substitute value of the potentiometer circuit is 25 kΩ.

b) Memory off

Via switch S1, which blocks V1367, a voltage of +12 V is applied via R1453 (23k7) and diode V1379 to the input of the amplifier. Due to the inversion, the output voltage is

$$\frac{-100}{23,7} \times 12\ V \approx -50\ V \left(\frac{-R1443}{R1453} \times 12\ V\right)$$

c) Max. Write

When the MAX WRITE switch is closed and the substitute resistance of the potentiometer circuit is equal to the d.c. level circuit (25 kΩ) at the output, a voltage of 0 V...+7,2 V is added to the d.c. voltage.

d) Just black

The potentiometer circuit of the 'just black' adjustment is designed so that the substitute resistance is also 25 kΩ, but now the values are different, so a voltage of 0 V...+17 V can be adjusted at the amplifier output.

e)150 V

A non-adjustable voltage is available, switched in by driving D1308 (11, 12, 13) correctly.

$$-\frac{R1443}{R1431} \times -12\ V = -\frac{100}{7,87} \times -12 \approx 150\ V$$

In the timing diagram, Fig. 2.6., the relation between several points in the circuit is shown.
The sequence is as follows:

1) On depressing the ERASE switch S8, input D1304-2 goes high and output D1304-12 goes low if the gate is enabled; i.e. switches in MEMORY ON and WRITE position and time-base not running.
2) A low on D1304-12 results in D1303-6 going high.
3) This high level sets the three outputs 10, 4 and 13 of D1308 to a low level, which results in resetting possible previous erase actions and the amplifier output is set to 150 V via D1308 (11, 12, 13).
4) After releasing the ERASE action, the timers D1307 start, and depending on the RC combination at the timing inputs, they give a high output level for 100 ms, 600 ms and 1200 ms.
5) After 100 ms, output D1308-13 goes high and the amplifier output is set to the adjusted d.c. level.
6) At 600 ms after the release of the erase pushbutton, output D1307-16 goes low, which results in a high level on output D1308-10.
7) Output D1306-11 now goes high.
8) Output D1308-1 goes low which makes diode V1382 conduct and the voltage set by the 'just black' potentiometer circuit is applied to the amplifier, resulting in an output voltage between 0 V and +17 V.
9) After 1200 ms following the release of the erase pushbutton, output D1307-1 goes low and output D1308-4 goes high.
10) Output D1306-11 now goes low.
11) As a result, D1308-1 goes high and the amplifier is set to the adjusted d.c. level.

It is impossible to start an erase action if:

- The instrument is already executing an erase action.
  Output D1307-1 is high so the RES pulse drives V1302 into saturation and D1304-2 input goes low, which blocks the gate.
- The instrument is set to READ.
  Input D1344-13 is then low, therefore the gate blocks.
- The instrument is set to AUTO STORE and a time-base sweep is started or already executed. At the start of the time-base, the BT signal goes high and the flip-flop D1302 is set, so output 6 goes low and NAND gate D1304 blocks via input 1.

  Moreover, in the MEMORY OFF position the erase action is inhibited by a low level on input D1304-13, which blocks the gate. Also the voltage of the storage mesh is set to -50 V because transistor V1376 is blocked blocked and a +12 V is applied via V1379 and R1453 to the amplifier input. The output is then

$$-\frac{100}{23,7} \times 12 = -50\ V \ . \left(\frac{R1443}{R1453} \times 12\ V\right)$$

2.5.2.2. The Collector Mesh G8

The circuit for the voltage on the collector mesh is shown on the circuit diagram of the Z amplifier and c.r.t. This voltage is derived from the +180 V supply and reduced by the zener diode voltage of V1529 (33 V) to give a mesh voltage of approximately 150 V.

2.5.2.3. Collimator G71

In the storage mode, the voltage on this collimator is adjustable between 20 V and 55 V by means of R1394. For the first 600 ms of the erase action this voltage is increased by approximately 35 V with blocking transistor V1356, which is controlled via D1308/10.

2.5.2.4. Collimator G72

The voltage on this collimator is adjustable between 30 V and 80 V by potentiometer R1347. In addition, an extra voltage is applied during the period of the erase action (1200 ms). This voltage is adjustable by R1351. In the MAX' WRITE position, a voltage is added, adjustable by R1357.

2.5.2.5. Collimator G73

The d.c. voltage on this collimator can be adjusted by R1342. During the last 600 ms of the erase action this voltage is increased by a voltage adjustable by R1338.

2.5.2.6. Flood-gun anode voltage

In the normal and storage modes the flood-gun anode is at 28 V. During the first 600 ms of the erase action it is raised to 50 V because transistor V1353 blocks by a low signal on its base. Consequently, the flood-gun current is increased.
In READ mode, this voltage switches between 0 V and 28 V under the control of the variable duty-cycle generator D1309, which has a frequency of 125 Hz approx. The duty cycle is controlled by the BRIGHTNESS potentiometer and gives the facility to vary the brightness in the READ mode.

2.5.2.7. Flood-gun cathode voltage

The cathodes are at 0 V potential.
In the AUTO STORE mode, the flood guns are switched off by blocking V1349, which raises the flood-gun cathode voltage to +38 V. As this is higher than the anode voltage of +28 V, the flood-gun current is switched off. The balance of the cathodes can be adjusted by R1419. This adjustment is necessary to equalise the degree of light on both sides of the c.r.t. screen.

2.5.3. X-Y Correction in Auto Store

When AUTO STORE is switched on, the flood-gun current is switched off by blocking the transistor V1349 in the cathode circuit.
The sensitivity of the c.r.t. now decreases so a correction is necessary.
This is achieved by increasing the gain of the horizontal and vertical deflection circuit.
The control signals for this correction are derived from the circuit comprising transistors V1338 and V1339.
The output voltages are:

for Y correction	–	Auto store ON:	+5 V approx.
		Auto store OFF:	-7 V approx.
for X correction	–	Auto store ON:	0 V approx.
		Auto store OFF:	+17 V approx.

To adjust the Auto Store sensitivity, a service jumper is fitted. The procedure is as follows:

- remove jumper and supply a frequency of 10 Hz approx. at TTL-level on point X1306,
- adjust the final amplifiers so that the traces are positioned at the same level,
- remove the frequency source,
- replace jumper S1301.

2.5.4. View Time

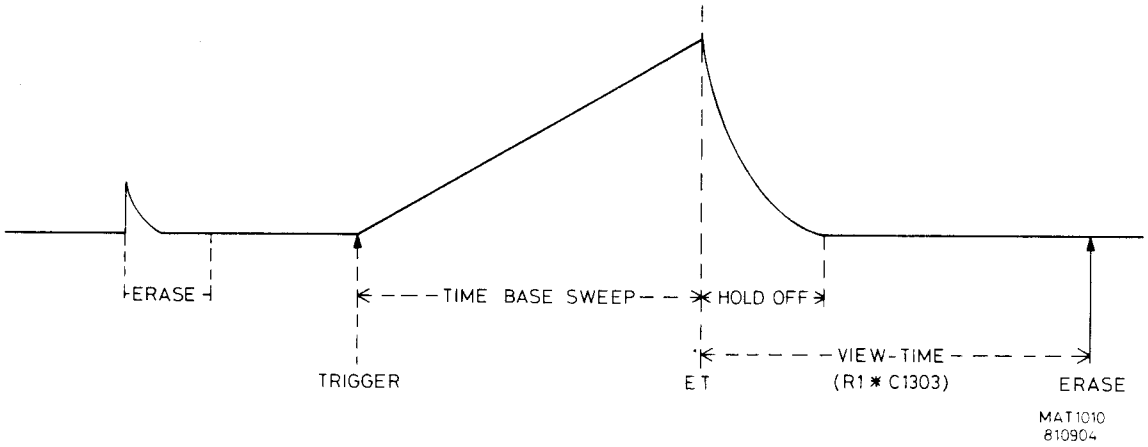

Fig. 2.7.

The erase action starts by switching on VIEW TIME as a pulse from this switch is applied to D1303/1 via transistors V1309 and V1312.

At the end of the time-base sweep, the view time starts for a period determined by the product of R1 and C1303, and output D1307-8 goes high. At the end of the view time output D1307-8 goes low and thus the inputs of the other timers (100, 600 and 1200) are activated and the erase action starts.

If during the view time the erase button is depressed, the erase action starts and interrupts the view time. This interruption is the result of a low level on D1308-10, which blocks V1303. Consequently, C1303 floats and is charged to $\frac{300}{400} \times 12\ V = 9\ V$ via R1.
The timer sees this input voltage as a completion of the timing so the output goes low. This starts the erase action as the inputs of the timers are activated.

If VIEW TIME is switched on (control knob pulled) and AUTO STORE is switched off in WRITE mode, the erase action is started by a pulse on D1303-1 via diode V1308 and transistors V1309, V1312.
If VIEW TIME is switched on and AUTO STORE switched off while the instrument is in READ mode, switching from READ mode to WRITE mode introduces an erase action via diode V1307 and transistors V1309, V1312.
If VIEW TIME is switched on and READ mode is switched on, then V1309 will conduct via diode V1307. This results in a pulse on input D1301-9 and, via D1301 (4,5,6) and transistor V1315, the complete timer D1307 is reset so that it does not react to any input pulse.

2.5.5. Variable Duty-cycle Generator

The variable duty-cycle generator is formed by D1309 (8,9,14) and D1309 (10,11,13) and the frequency-determining components R1371, R1372 and C1314.
The generator output is a sawtooth voltage with a frequency of 127,76 Hz.
Using two comparators with a variable comparison point, two different variable duty-cycle generators are formed.
One generates pulses to drive the storage mesh G9 via D1308 (2,1). Diode V1382 goes conductive at the frequency and duty-cycle adjusted by the PERSISTENCE potentiometer R14, thus applying the 'just black' level to the G9 output amplifier.
This duty-cycle can vary between 0 % and 50 %.
The other circuit generates pulses to obtain variable brightness by controlling the flood-gun anodes. In this case, the duty-cycle can vary between 0 % and 100 %.

2.6. CATHODE-RAY TUBE CIRCUITS

The cathode-ray tube circuits consist of the c.r.t. and its associated controls: focus, intensity, trace rotation and the beam blanking amplifier.

2.6.1. C.R.T. Controls

The front-panel intensity control R17 (INTENS) provides continuous control of the display brightness by varying the gain of transistor V1514 at the input of the beam blanking amplifier.

The display of the c.r.t. is focussed by the front-panel FOCUS control R16, the slider of which is connected to grid G3 of the c.r.t. The control forms part of a potential divider across the 1,5 kV output of the power supply.

TRACE ROTATION is achieved by a coil mounted in a mu-metal screen around the neck of the c.r.t., which provides a magnetic field for rotational control of the entire scan. The degree and direction of rotation is determined by the setting of the preset front-panel TRACE ROT. control R15. The coil is fed from the common emitters of complementary transistors V1527 and V1528, their bases being controlled by R15.

ASTIGMATISM of the spot is corrected by preset control R1546, part of a divider network across the +180 V and -180 V supply. The slider potential is fed to G4 of the c.r.t. to provide adjustment of the spot shape.

Similarly, preset R1552 provides a potential on G6 to correct the GEOMETRY of the display for barrel and pin-cushion distortion.

2.6.2. Beam Blanking Amplifier

There are three input signals for the beam blanking amplifier:

- a trace unblanking signal from the MTB
- a trace unblanking signal from the DTB
- a blanking signal from the channel multivibrator for the trace when switching from channel to channel in the chopped mode.

As stated, the INTENS potentiometer R17 determines the amount of input current fed to the amplifier.

Referring to the main time-base circuit diagram, in all deflection modes except X DEFL, the trigger pulse forces output D907-9 of the flip-flop, and hence NAND-gate input D909-1 to a low level. Therefore, during a MTB sweep a high output on D909-12 gives a low level on NAND-gate output D901-11, which is fed via diode V902 as a MTB unblanking pulse to block diodes V1504, V1506 at the input of the Z amplifier.

Considering the X DEFL mode; with the X deflection mode selector switched in this mode a permanent low level is applied to inputs 3,2, of NAND gates D909. This results in output D909-12 going high, which gives a permanent unblanking signal via D901-11 and diode V902, which again blocks diodes V1504 and V1506 at the Z amplifier input — the condition for unblanking.

Referring to the delayed time-base circuit diagram, the DTB unblanking signal is taken from D-type flip-flop D907, output 5. This pulse is routed via emitter-follower V1010 and diode V1009. The negative-going signal blocks diodes V1507, V1506, at the input of the beam Z amplifier.

The Y chopped mode blanking signal from the channel multivibrator is fed to inverter transistor V1503 via R1501. The chopper blanking suppression signal from the ALT TB logic (from X-AMPL via R1112) is fed to the collector of V1503. These X-Y blanking signals that remove the trace during flyback in the CHOP mode result in diode V1502 conducting.

MTB selected:

- With the TIME/DIV switch S21 of the DTB at OFF, only the MTB unblanking pulse is fed to the shunt feedback amplifier V1517, V1518, and a bright MTB trace is displayed on the c.r.t.
- With the TIME/DIV switch of the DTB switched ON (i.e. not at OFF position), R1509 is connected to the +12 V supply and current flows through the brilliance ratio potentiometer R1506.
  During the part of the sweep when only the MTB is running, a portion of the MTB current, controlled by R1506, flows into the Z amplifier and trace brilliance is reduced. However, during the DTB gate the collector of V1508 goes low and this transistor cuts off increases the current through R1506. As a result, more current flows out-of the Z amplifier and the trace is intensified while the DTB is running. The ratio between the intensified and the non-intensified portion is constant for low and high intensity.

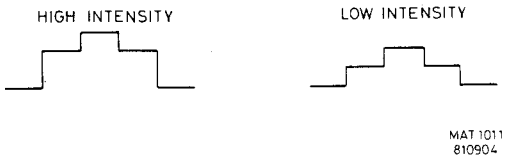

Fig. 2.8.

DTB selected:

- If the delayed time-base is selected, the MTB unblanking signal is suppressed and only the DTB unblanking pulse is fed to the shunt feedback amplifier. The trace is then unblanked for the duration of the delayed time-base sweep.

All the foregoing inputs are applied via diode V1516 to the base of transistor V1517, point A in the simplified diagram, Fig. 2.9. . This is the virtual earth point of the shunt feedback amplifier.

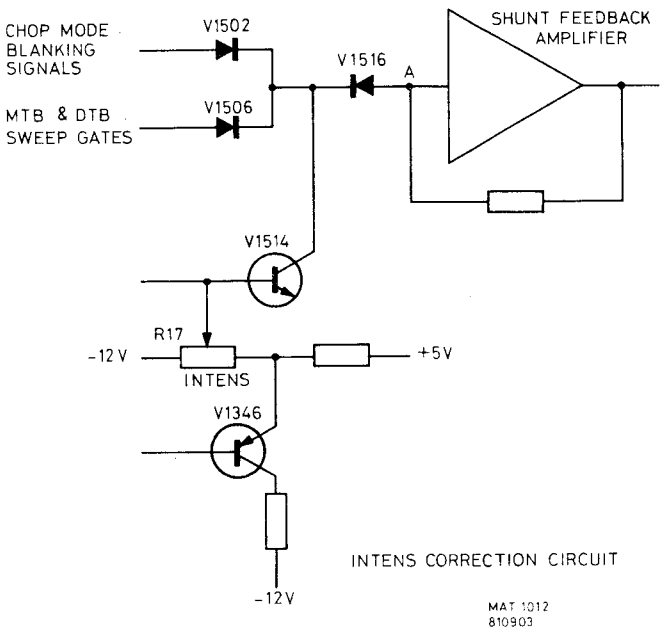

Fig. 2.9.

Assuming that diodes V1502 and V1506 are blocked by applying a logic zero to both inputs, the beam unblanking amplifier operates as follows. With no input, the output voltage of the amplifier can be varied by the INTENS potentiometer R17. The light intensity on the c.r.t. screen is therefore variable during an MTB or DTB sweep or in the X DEFL mode.
A logic 1 however on either or both inputs to diodes V1502, V1506 turns off diode V1516 and the c.r.t. is blanked; e.g. between sweeps or during the sweep when there is channel switching in the CHOP mode. Diode V1513 serves as a black level clamp. The blanking signal is amplified in V1517, V1518 and V1521.
At the output of the shunt feedback amplifier the a.c. and d.c. components of the blanking signal are split up and routed via different paths to isolate the high potential cathode and Wehnelt cylinder (at -1,5 kV) from the other circuits.
The a.c. path is taken via capacitor C1511 to the Wehnelt cylinder.
The d.c. component signal is fed to the emitter of transistor V1523 via a low-pass filter R1529, C1507, R1528. Together with transistor V1522, V1523 forms a multivibrator circuit which feeds a peak detector V1526. The a.c. voltage on the collector of V1523 has a peak-to-peak value dependent on the voltage fed to the emitter by the shunt feedback amplifier. Capacitor C1508 provides the a.c. coupling (and the necessary isolation) to the peak detector. This rectifies the multivibrator output waveform. The dark level is adjusted by means of potentiometer R1532 in the emitter circuit of V1523 in the d.c. amplifier.

2.6.3. Storage blanking and intensity correction circuit

In the SAVE and READ modes, Z modulation is inhibited. A logic 0 applied via these switches to D1304-4 input gives a logic 1 at the output D1304-6, which switches on transistor V1342. The 0 V on its collector switches off the common-base transistor V1343 and consequently the output transistor V1346 conducts and applies a - 12 V signal to one end of the INTENS control.

When WRITE and/or MEM OFF are selected, a high input is applied to NAND gate D1304-4. If a sweep is in progress input D1304-3 will be high (and also input 5 since the start sweep inhibits the erase action). This gives a logic 0 at the output D1304-6, which switches off transistor V1342. The collector supply +5V is applied via R1402 to switch on the common-base transistor V1343. In all sweep modes except X-DEFL an additional supply path is provided via diode V1337. This makes V1343 fully conductive and switches off V1346 via Zener diode V1344. The INTENS control is now supplied with +5 V via R1404 to correct the beam intensity.

With X-DEFL mode selected, the beam current control is not operative and the Z amplifier is unblanked. The 0 V via the X-DEFL switch causes diode V1336 to conduct and diode V1337 blocks. In this mode, V1343 conducts via R1402 only. Transistor V1346 is partially conductive and the voltage on its emitter is applied to the INTENS control to give the required measure of unblanking.

2.6.4. Calibration Unit

The calibration unit comprises a built-in square-wave generator using an operational amplifier D1501 with feedback loops to give a frequency of 2 kHz approx. The frequency-determining components are R1557 and C1516.
Zener diode V1532 determines the amplitude of the square-wave output, and preset R1561 allows accurate adjustment of the output voltage and current.
The output amplitude is 1,2 V peak-peak with an accuracy of ± 1 %.

2.7. POWER SUPPLY UNIT

2.7.1. General

The power supply is designed on the switching regulator principle and permits the instrument to be connected to nominal mains voltages of 110 V, 220 V or 240 V by switch selection, or to an external battery supply of 21...30 V.
The mains supply via POWER ON switch S32 is protected by fuse F1601 in the primary circuit of the mains transformer T1601. The battery input is protected by fuse F1602 and diode V1606 safe-guards the circuit against reversed battery connection.

Basically, the power supply consists of:

- the mains rectifier circuit
- the switching circuit
- the regulator circuit
- the switching-on and protection
- output circuits

2.7.2. Mains Rectifier Circuit

The secondary winding of the mains transformer T1601 supplies the full-wave rectifier bridge V1607. This gives an unregulated +12 V supply across the smoothing capacitor C1618 and its discharge resistor R1630. When an external battery supply is used, it is connected via the protective fuse and diode across the smoothing capacitor and the discharge resistor. Fuse F1603 in the negative d.c. supply is operative for both battery and mains supply. The small capacitors across the bridge service to suppress noise spikes to the mains.
The 50 Hz trigger signal is derived via capacitor C1615 from the rectifier bridge.

2.7.3. The Switching Circuit

Basically, this description covers the pulsed output from the regulator circuit controlling the switching of the flip-flop, the switching of the drivers and power transistors and the forward converter action for transferring the energy to the secondary output circuits.
In principle, the forward converter transfers energy from input to output during the conduction period (t_{on}) of the power switching transistors. The two-transistor version has the advantage that full-wave rectifying is possible at the secondary windings of the convertor transformer.

Considering the circuit diagram, the variable duty-cycle output pulses from pin 15 of the regulator circuit D1601 (TDA 1060) are fed to input pin 6 of two pulse-shaping gates D1602 to provide the clock pulses for flip-flop D1603 (pin 3). The two outputs of this flip-flop are routed via NOR gates D1602 (8,8,20) (11,12,13) to switch driver transistors V1618 in turn. These provide a current source of 100 mA and the driver transformers in their collectors (turns ratio 6 : 1) give in theory a base drive current of 600 mA to the power switching transistors V1623, V1626. During the time each transistor is conducting, the current decreases to 400 mA and magnetic energy is stored. During switching-off the magnetic energy serves to suppress the whole storage of the transistors by reversing the base voltage, thus preventing damage by simultaneous conduction of the transistors.
Ideally, the switching transistors should be fully off or saturated, i.e. the base region charge should be removed as fast as possible.
Ringing of the switching resonant circuit is suppressed by R1636, R1637 and the series network R1639, C1626.
Diodes V1624, V1626 serve to protect the power transistors V1623, V1626 against excessive potentials.
When the switching transistors are blocked (t_{off}), diodes V1621, V1622 provide a feedback path for the residual magnetic energy to smoothing capacitor C1618 in the interest of efficiency. The amount of energy in the switching circuit during operation is determined by the forward converter circuit. The energy stored in transformer T1603 is fed back during cut-off of a switching transistor via the flywheel diode V1609. The RC network R1629, C1612 serves to suppress ringing.

2.7.4. The Regulator Circuit

The regulator is built around the integrated circuit D1601. It includes an internal sawtooth oscillator operating at a frequency of 40 kHz. The duty-cycle is varied automatically by feedback from the output to compensate for mains and load variations.
The regulator circuit is controlled by:

- A feedback voltage derived from the rectified feedback winding (T1607, 12-14) via diode V1629 and R1640. This +14 V is applied as a regulator control voltage between the negative rail and the junction of R1601, R1602. Resistor R1601 (ADJUST CONTROL VOLTAGE), controls the feedback to the voltage sensing input 3 of D1601.
- A feed forward voltage on D1601-16, derived from the mains voltage, which provides direct compensation for mains variation. It pre-adjusts the sawtooth amplitude and so the output duty-cycle in accordance with the level of the unregulated +24 V.
- Current-limiting occurs at 480 mV on D1601-11. This is sensed via C1607 and clamped by D1604 and controls the regulator in the event of overload. The current is determined by the voltage across R1626, R1627, R1628.
- Frequency determining components for the sawtooth oscillator, C1602 on pin 8 and R1607 on pin 7, connected to the negative rail.
- An internal reference of 8.5 V available on pins 2 of D1601. This reference voltage is also fed to pins 5 and 9. The functions of these connections are not used.

Under normal working conditions, the power supply voltages for the regulator circuit are provided by the rectifiers V1628 (= 14 V) and V1631 (-14 V) connected to the feedback winding of T1607.

2.7.5. Switching-on and Protection

At the moment of switching-on the instrument, no supply voltage is immediately available for the regulator circuit from the feedback winding (14,12) of T1607. However, transistor V1616 is fully conducting and provides +12 V to D1601-1 at switch-on regulated at the base of V1616 by zener diodes V1613 and V1614.
As soon as the switching converter is working the +14 V rectified supply from T1607 feedback winding turns off V1616 and provides the +14 V operating supply via diode V1628 to D1601-1.
The +5 V supply for the logic circuits D1602, D1603 is derived from the emitter of V1617, the base being regulated by Zener diode V1614.
At switch-on, the unregulated supply is applied to pin 16 of D1601. To obtain a slow start the voltage across electrolytic C1603 builds up in 0,5 ... 1 sec to 6,5 V and is applied to pin 6 of D1601. C1603 also serves to reduce the effects of excessive current surges (the supply goes into 'hiccup' mode).
To obtain a quick switch-off transistor V1601 and U1602 are switched in the circuit. At a level of 19,5 V approx. V1601 conducts and therefore V1602 conducts too. Now at pin 10 of D1601 0 V is applied and D1601 switches off.
The quick switch-off is necessary for the maintaining of the storage effect. (The high voltage should be cut off at once.)

2.7.6. Output Circuits

The primary windings of the regulator output transformer T1607 are the collector loads of the power switching transistors. The secondary windings that provide the voltages for the various circuits in the oscilloscope are completely isolated from the mains poiwer supply.

Winding 3,7, supplies the final accelerator anode voltage of +7 kV, derived via a voltage quadrupler circuit from the -1500 V cathode supply for the c.r.t. This supply is controlled by preset R1650 via operational amplifier D1604 and transistor V1647. Note that the filament of the c.r.t. is also coupled to this -1500 V potential via resistor R1655 (connected to winding 1,2).
The flood-gun filaments are supplied from winding 5,6, via bridge rectifier and smoothing capacitor C1652.

All other supply feeds are derived from tapping points on a single secondary winding, earthed at a single point (8) on the transformer to reduce interference. Each supply is individually rectified and smoothed.

3. DISMANTLING THE INSTRUMENT

3.1. WARNINGS

WARNING: The opening of covers or removal of parts, except those to which access can be gained by hand, is likely to expose live parts, and also accessible terminals may be live.
The instrument shall be disconnected from all voltage sources before any adjustment, replacement or maintenance and repair during which the instrument will be opened.
If afterwards any adjustment, maintenance or repair of the opened instrument under voltage is inevitable, it shall be carried out only by a skilled person who is aware of the hazard involved.
Bear in mind that capacitors inside the instrument may still be charged even if the instrument has been separated from all voltage sources.

3.2. REMOVING THE COVERS

The instrument is protected by three covers: a front panel protection cover, an instrument cover with carrying handle, and a rear panel.
To facilitate removal of the cover and the rear panel, first ensure that the front cover is in position.

Then proceed as follows:

- hinge the carrying handle clear of the front cover; to this end, push both pivot centre buttons
- stand the instrument on its protective front cover on a flat surdace
- slacken the two coin-slot screws located on the rear panel
- lift the rear panel at the right-hand side, slide it a bit to the right and take it off
- remove the four screws that fix the cast aluminium profile
- remove the cast aluminium profile
- remove the instrument-cover by lifting it off the instrument.

Note: Bend-out the cover at the side of the rubber feet so that the feet do not stick behind frame parts.

3.2.1. Removing the carrying handle

- Prise off the centre knobs from each pivot, using a screwdriver (Fig. 3.1.) in one of the small slots at the sides of the knobs.
- Remove the cross-slotted screws that are now accessible.
- Bend both arms of the handle slightly outwards and take it off the cabinet.
- Grip and arms of the carrying handle must be ordered separately (see list of mechanical parts). A complete carrying handle can easily be constructed by pressing the arms into the grip.

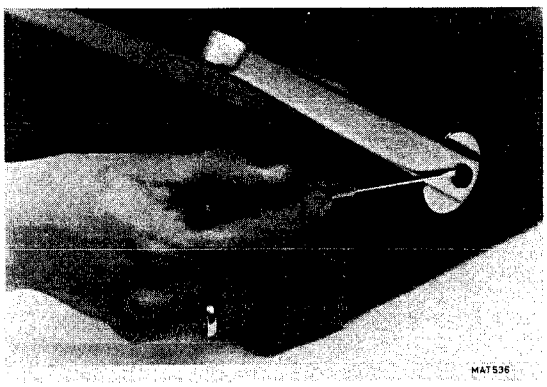

Fig. 3.1.

3.3. ACCESS TO PARTS FOR CHECKING AND ADJUSTING PROCEDURE

All the adjustment elements can be reached after removing the instrument cover.

Note: For adjustment always use an insulated adjustment tool.

4. PERFORMANCE CHECK

4.1. GENERAL INFORMATION

WARNING: Before switching on, ensure that the oscilloscope has been installed in accordance with the instructions outlined in Chapter 2, Installation instructions of the Operation Manual.

This procedure is intended to be used for incoming inspection to determine the acceptability of newly purchased or recently recalibrated instruments.
It does not check every facet of the instrument's calibration; rather it is concerned primarily with those portions of the instrument which are essential to measurement accuracy and correct operation.
Removing the instrument's covers is not necessary to perform this procedure. All check's are made from the front panel.

If this test is start a few minutes after switching on, bear in mind that test steps may be out of specification, due to insufficient warming-up time. To avoid this situation, allow the specified warming-up tme.

The performance checks are made with a stable, well-focussed, low-intensity display. Unless otherwise noted, adjust the intensity and trigger-level controls as needed.

Note 1: At the start of every check, the controls always occupy the preliminary settings; unless otherwise stated.
Note 2: The input voltage has to be supplied to the A-input; unless otherwise stated.
Note 3: Set the TIME/DIV switches to a suitable position; unless otherwise stated.

4.2. PRELIMINARY SETTINGS OF THE CONTROLS

- Start this check procedure with **NO** input signals connected, **ALL** pushbuttons released and **ALL** switches in the CAL position.
- Depress the controls as indicated in figure 4.1.

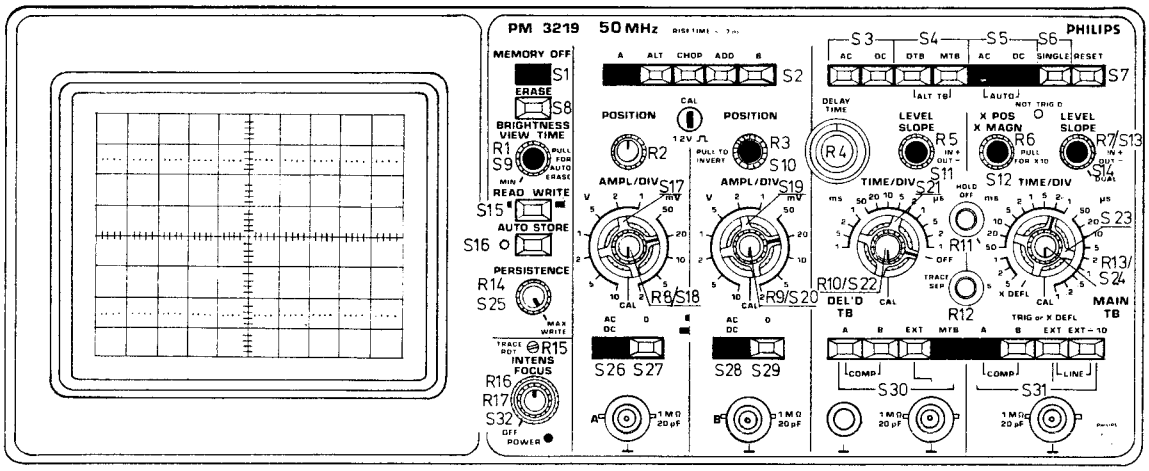

Fig. 4.1.

4.3. RECOMMENDED TEST EQUIPMENT

Type instrument	Required specification	Example of recommended instrument
Function generator	Freq.: 1 mHz ... 10 MHz Sine-wave/Square-wave Ampl.: 0 ... 40 Vp-p DC offset 0 ... ± 10 V Rise-time < 30 ns Duty cycle 50 %	Philips PM 5167
Constant amplitude sine-wave generator	Freq.: 100 kHz ... 60 MHz Constant ampl. of 120 mVp-p and 3 Vp-p	Tektronix SG 503
Square-wave calibration generator	Freq.: 10 Hz ... 1 MHz Ampl.: 50 mV ... 60 V Rise-time < 1 ns Duty cycle 50 %	Tektronix PG 506
Time-marker generator	Repetition rate: 0,5 s ... 0,05 μs	Tektronix TG 501
Variable mains transformer	Well-insulated output voltage 90 ... 264 Vac	Philips ord. number 2422 529 00005
DC power supply	Adjustable output: 20 ... 28 V Current: 1,5 A	Philips PE 1540
Moving-iron meter		
Dummy probe 2 : 1	1 MΩ ± 0,1% //25pF	
Cables, T-piece, terminations for the generators	General Radio types for fast rise-time square-wave and freq. sine-wave. BNC-typer for other applications	

4.4 CHECKING PROCEDURE

STEP	OBJECTIVE	INPUT VOLTAGE	SETTINGS	REQUIREMENTS	MEAS. RESULTS
4.4.1.	**POWER ON**				
4.4.1.-1a	Start power on a.c.		Set POWER ON switch S32 to ON	– Starts at selected mains voltage ± 10 % and mains frequency 50-400 Hz ± 10 % – Pilot lamp POWERB3 lights up	
4.4.1.-1b	Power consumption			40 W from a.c.	
4.4.1.-2a	Start POWER ON		Set POWER ON switch S32 to ON	– Starts at battery supply voltages between 21 V and 30 V – Pilot lamp POWER B3 lights up	
4.4.1.-2b	Current rating			1,4 A approx.	
4.4.2.	**CRT SECTION**				
4.4.2.1.	Intens		INTENS potentiometer R16 ↺	Normal intens adjusting	
4.4.2.2.	Focus		FOCUS potentiometer R17 ↺	Trace sharpness adjusting	
4.2.3.	Trace rotation		Screwdriver adjustment TRACE ROT R15	Trace must be in parallel with horizontal graticule lines; if necessary, readjust potentiometer TRACE ROT R15	
4.4.3.	**VERTICAL AXIS**				
4.4.3.1.	Display modes	Sine wave signal, 60 mV p-p, 2 kHz to A and B input	– AMPL/DIV to 20 mV/div		
			Depress A of S2	Signal of 3 div. is visible on the screen	
			Depress CHOP of S2	Traces of ch. A and ch. B are visible on the screen	
			Depress ALT of S2	Traces of ch. A and ch. B are visible on the screen	
			Depress ADD of S2	Signal of 6 div is visible on the screen	
			Depress B of S2	Signal of 3 div. is visible on the screen	
4.4.3.2.	Polarity inversion ch.B	as 4.4.3.1.	Pull the PULL TO INVERT switch S10	Display is inverted	
4.4.3.3.	Input coupling	Sine wave signal, 2 kHz + DC offset to A (B) input	Depress 0 of S27 (S29)	Set the trace in the centre of the screen	
			Release 0 of S27 (S29)	Signal is visible on the screen, centre of the sine-wave is on the vertical centre of the screen	
			Release S26 (S28) to DC	Signal is visible on the screen, centre of the sine-wave is on DC-offset level	
4.4.3.4.	Vertical deflection coefficients	Square wave signal, 2 kHz to A (B) input	AMPL/DIV switch position of S17 (S19)		
		AMPL: 12 mVp-p	2 mV	Trace height 6 div. ± 3 % (± 0,9 subdiv.)	
		30 mVp-p	5 mV	Trace height 6 div. ± 3% (± 0,9 subdiv.)	
		60 mVp-p	10 mV	Trace height 6 div. ± 3% (± 0,9 subdiv.)	
		120 mVp-p	20 mV	Trace height 6 div. ± 3% (± 0,9 subdiv.)	
		300 mVp-p	50 mV	Trace height 6 div. ± 3% (± 0,9 subdiv.)	
		600 mVp-p	0,1 V	Trace height 6 div. ± 3% (± 0,9 subdiv.)	
		1,2 Vp-p	0,2 V	Trace height 6 div. ± 3% (± 0,9 subdiv.)	
		3 Vp-p	0,5 V	Trace height 6 div. ± 3% (± 0,9 subdiv.)	
		6 Vp-p	1 V	Trace height 6 div. ± 3% (± 0,9 subdiv.)	
		12 Vp-p	2 V	Trace height 6 div. ± 3% (± 0,9 subdiv.)	
		30 Vp-p	5 V	Trace height 6 div. ± 3% (± 0,9 subdiv.)	
		30 Vp-p	10 V	Trace height 3 div. ± 3 % (± 0,45 subdiv.)	
4.4.3.5.	Continuous control	Square wave signal 120 mVp-p, 2 kHz to A (B) input	– AMPL/DIV switch position of S16 (S19) to 20 mV/div. – Continuous control S18 (S20) ↺	Continue range 1 : ≥ 2,5 (≤ 2,4 div.)	

STEP	OBJECTIVE	INPUT VOLTAGE	SETTINGS	REQUIREMENTS	MEAS. RESULTS
4.4.3.6.	Vertical deflection via dummy	Square wave signal, 2 kHz to A (B) input via dummy	AMPL/DIV switch position of S17 (S19):		
	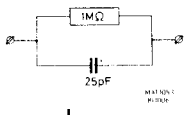	AMPL: 24 mVp-p	2 mV	Trace height 6 div. ± 3 % (± 0,9 subdiv.)	
		60 mVp-p	5 mV	Trace height 6 div. ± 3% (± 0,9 subdiv.)	
		120 mVp-p	10 mV	Trace height 6 div. ± 3% (± 0,9 subdiv.)	
		240 mVp-p	20 mV	Trace height 6 div. ± 3% (± 0,9 subdiv.)	
		600 mVp-p	50 mV	Trace height 6 div. ± 3% (± 0,9 subdiv.)	
		1,2 Vp-p	0,1 V	Trace height 6 div. ± 3% (± 0,9 subdiv.)	
		2,4 Vp-p	0,2 V	Trace height 6 div. ± 3% (± 0,9 subdiv.)	
		6 Vp-p	0,5 V	Trace height 6 div. ± 3% (± 0,9 subdiv.)	
		12 Vp-p	1 V	Trace height 6 div. ± 3% (± 0,9 subdiv.)	
		24 Vp-p	2 V	Trace height 6 div. ± 3% (± 0,9 subdiv.)	
		30 Vp-p	5 V	Trace height 3 div. ± 3 % (± 0,45 subdiv.)	
		40 Vp-p	10 V	Trace height 2 div. ± 3 % (± 0,3 subdiv.)	
4.4.3.7.	Common mode rejection	Sine wave signal 480 mV, 1 MHz to A and B input	– AMPL/DIV switches to 20 mV – Pull the PULL TO INVERT switch S10 – Depress ADD of S2	Rejection > 100 (signal < 0,25 div.)	
4.4.3.8.	Dynamic range	Sine wave signal 2,4 V, 10 MHz to A (B) input	– AMPL/DIV to 0,1 V – Position control R2 (R3) ↻	24 div. trace height distortion free visible on the screen	
4.4.3.9.	Vertical positioning	Sine wave signal 2,4 V 10 kHz to A (B) input	as 4.4.3.8.	Top of sine wave signal visible on the screen in both extreme positions of the POSITION CONTROL	
4.4.3.10.	Trace jump a. attenuator		– Depress 0 of S27 (S29) – Set trace in centre of the screen – All positions of AMPL/DIV S17 (S19) except b.	Trace jump ⩽ 0,1 div.	
	b. 20 mV ⟶ 10 mV		– AMPL/DIV switch S17 (S19) between 20 mV ⟶ 10 mV	Trace jump ⩽ 1 div.	
	c. normal/invert		– Pull and push switch S10	Trace jump ⩽ 1 div.	
4.4.3.11.	Square wave response	Square wave signal 120 mVp-p, 1 MHz, risettime ⩽ 1 nsec.	– AMPL/DIV switch S18 (S20) to 20 mV	Trace height 6 div. Pulse abberations ⩽ 3 % (⩽ 5 % p-p) Risetime ⩽ 7 nsec.	
4.4.3.12.	Visible signal delay	as 4.4.3.11.	– AMPL/DIV to 20 mV – PULL X MAGN S12 – MTB TIME/DIV to 0,1 μs.	Leading edge visible on the screen	
4.4.3.13.	Bandwith	Sine wave signal to A (B) input			
		1 MHz		Adjust the sine wave amplitude for a trace height of 6 div.	
		1 MHz - 50 MHz		Trace height ⩾ 4,2 div.	
4.4.4.	**HORIZONTAL AXIS**				
4.4.4.1.	Display modes	Sine wave signal 120 mVp-p, 2 kHz	– AMPL/DIV to 50 mV – MTB TIME/DIV to 0,2 ms – Depress MTB of S4	Sine wave signal 2,4 div. high (MTB trace)	
			– DTB TIME/DIV to 50 μs	Intensified part DTB is visible on the screen	
			– Depress DTB of S4	DTB trace visible on the screen	
			– Depress DTB and MTB of S4 (= ALT TB)	MTB trace with intensified part and DTB trace visible on the screen	
			– MTB TIME/DIV to X DEFL	Horizontal deflection is determined by the input signal A (2,4 div.)	
4.4.4.2.	Trace separation		– MTB TIME/DIV to 0,2 ms – DTB TIME/DIV to 50 μs – Depress MTB and DTB (= ALT TB) of S4 – Trace SEP control R12 ↻	Both time-base lines cover each other (e.g. one line)	
			– Trace SEP control R12 ↻	MTB trace (with intensified part) 2 div. upwards and DTB trace 2 div. downwards	
4.4.4.3.	X Positioning range		X POS control R5 ↻	Starting point of trace to horizontal centre of the screen	
			X POS control R5 ↻	End of trace to horizontal centre of the screen	

STEP	OBJECTIVE	INPUT VOLTAGE	SETTINGS	REQUIREMENTS	MEAS. RESULTS
4.4.5.1.	Time coefficients	Marker pulse signal to A input Repetition time:	– Depress MTB of S4 – MTB TIME/DIV switch		
		0,1 µsec	0,1 µs	Coefficient error ⩽ 3 % (≙ 0,3 div.	
		0,2 µsec	0,2 µs	over 10 div. screenwith)	
		0,5 µsec	0,5 µs	Coefficient error ⩽ 3% (≙ 0,3 div.	
		1 µsec	1 µs	over 10 div. screenwith)	
		2 µsec	2 µs	Coefficient error ⩽ 3% (≙ 0,3 div.	
		5 µsec	5 µs	over 10 div. screenwith)	
		10 µsec	10 µs	Coefficient error ⩽ 3% (≙ 0,3 div.	
		20 µsec	20 µs	over 10 div. screenwith)	
		50 µsec	50 µs	Coefficient error ⩽ 3% (≙ 0,3 div.	
		0,1 msec	0,1 ms	over 10 div. screenwith)	
		0,2 msec	0,2 ms	Coefficient error ⩽ 3% (≙ 0,3 div.	
		0,5 msec	0,5 ms	over 10 div. screenwith)	
		1 msec	1 ms	Coefficient error ⩽ 3% (≙ 0,3 div.	
		2 msec	2 ms	over 10 div. screenwith)	
		5 msec	5 ms	Coefficient error ⩽ 3% (≙ 0,3 div.	
		10 msec	10 ms	over 10 div. screenwith)	
		20 msec	20 ms	Coefficient error ⩽ 3% (≙ 0,3 div.	
		50 msec	50 ms	over 10 div. screenwith)	
		0,1 sec	0,1 s	Coefficient error ⩽ 3% (≙ 0,3 div.	
		0,2 sec	0,2 s	over 10 div. screenwith)	
		0,5 sec	0,5 s		
4.4.5.2.	X Magnifier	Marker pulse to A input, repetition time 0,1 msec	– MTB TIME/DIV switch to 1 msec – PULL X MAGN S12	Coefficient error ⩽ 5% (≙ 0,5 div. over 10 div. screenwith)	
4.4.5.3.	Continuous control	as 4.4.5.2.	– TIME/DIV switch to 10 µsec – Continuous control R13 ↻	Continuous range 1 : ⩾ 2,5	
4.4.5.4.	Single shot	Marker pulse to A input, repetition time 10 msec.	– TIME/DIV switch to 10 msec – Depress DC S5 – Depress SINGLE S6 – Depress RESET S7	Trace once visible NOT TRIG'D lamp glows after RESET and extinguishes at the end of the sweep	
4.4.6.	**DELAYED TIME-BASE**				
4.4.6.1.	Time coefficients	Marker pulse signal to A-input repetition time	Depress DTB of S4 MTB TIME/DIV S23 / DTB TIME/DIV S21		
		0,1 µsec	0,2 µs / 0,1 µs	Coefficient error ⩽ 3 % (≙ 0,3 div.	
		0,2 µsec	0,5 µs / 0,2 µs	over 10 div. screenwith)	
		0,5 µsec	1 µs / 0,5 µs	Coefficient error ⩽ 3% (≙ 0,3 div.	
		1 µsec	2 µs / 1 µs	over 10 div. screenwith)	
		2 µsec	5 µs / 2 µs	Coefficient error ⩽ 3% (≙ 0,3 div.	
		5 µsec	10 µs / 5 µs	over 10 div. screenwith)	
		10 µsec	20 µs / 10 µs	Coefficient error ⩽ 3% (≙ 0,3 div.	
		20 µsec	50 µs / 20 µs	over 10 div. screenwith)	
		50 µsec	0,1 ms / 50 µs	Coefficient error ⩽ 3% (≙ 0,3 div.	
		0,1 msec	0,2 ms / 0,1 ms	over 10 div. screenwith)	
		0,2 msec	0,5 ms / 0,2 ms	Coefficient error ⩽ 3% (≙ 0,3 div.	
		0,5 msec	1 ms / 0,5 ms	over 10 div. screenwith)	
		1 msec	2 ms / 1 ms		
4.4.6.2.	X Magnifier	Marker pulse to A input, repetition time 10 µsec	– MTB TIME/DIV to 0,2 ms – DTB TIME/DIV to 0,1 ms – PULL X MAGN S12	Coefficient error ⩽ 5 % (c.i. 0,5 div. over 10 div. screen with)	
4.4.6.3.	Continuous control	as 4.4.6.2.	– MTB TIME/DIV to 2 µs – DTB TIME/DIV to 1 µs – Continuous control R10 ↻	Continuous range 1 : ⩾ 2,5	
4.4.6.4.	Delay time	as 4.4.6.2.	– MTB TIME/DIV to 1 ms – DTB TIME/DIV to 10 µs – DELAY TIME control R4 to 0.00 – Set start MTB-trace on first vertical graticule line	Intensified part (DTB) starts at the same point as the MTB trace	
			– DELAY TIME control R4 to 10.00	Intensified part (DTB) starts at the last vertical graticule line (incremental delay time error ± 0,5 %)	

4.4.7. XY-DEFLECTION

STEP	OBJECTIVE	INPUT VOLTAGE	SETTINGS	REQUIREMENTS	MEAS. RESULTS
4.4.7.1.	Mode A (B)	Sine-wave signal 120 mVp-p, 2 kHz to A (B) input	Depress A (B) of S2 Depress A (B) of S31 Set MTB TIME/DIV to X DEFL AMPL/DIV to 20 mV	A line is visible with an angle of 45° with respect to the horizontal graticule line; trace heigh and trace width 6 div. ± 10 %. (c.i. ± 0,6 div.)	
4.4.7.2.	Mode EXT	Sine wave signal 1,6 Vp-p, 2 kHz to EXT input X6	Depress EXT of S31 Set MTB TIME/DIV to X DEFL	Trace width 8 div. ± 10 %	
4.4.7.3.	Mode EXT ÷ 10	Sine wave signal 16 Vp-p, 2 kHz to EXT input X6	Depress EXT ÷ 10 of S31 Set MTB TIME/DIV to X DEFL	Trace width 8 div. ± 10%	
4.4.7.4	Mode LINE		Depress LINE of S31 Set MTB TIME/DIV to X DEFL	Trace width 8 div. ± 10 %	
4.4.7.4.	Bandwidth	Sine wave signal, 2 kHz to EXT input X6	Depress EXT of S31 Set MTB TIME/DIV to X DEFL	Adjust the input voltage for a trace width of 8 div.	
		1 MHz		Trace width ⩾ 5,6 div.	
		1 MHz	Depress DC of S5	Trace width ⩾ 5,6 div.	
		1 MHz	Depress AC of S5	Trace width ⩾ 5,6 div.	
4.4.7.5.	Dynamic range	Sine wave signal, 100 kHz to A input	– Set MTB TIME/DIV to X DEFL – Depress B of S2 – AMPL/DIV to 0,2 V	Adjust the input voltage for a horizontal deflection of 6 div.	
			– AMPL/DIV to 50 mV	Horizontal deflection 24 div.	
4.4.7.6.	Phase shift between X and Y ampl.	Sine wave signal to A input 2 kHz 100 kHz	– Set MTB TIME/DIV to X DEFL – AMPL/DIV to 20 mV	Adjust the input voltage for a horizontal deflection of 6 div.	
				Phase shift ⩽ 3° (c.i. ⩽ 0,4 div.)	
				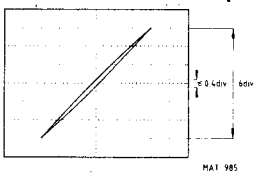 MAT 985	
4.4.8.	MTB TRIGGERING			*(Note: If triggers the NOT TRIG'D lamp is extinguished)*	
4.4.8.1.	Trigger source A and B	Sine wave signal, 10 kHz to A input and square wave signal, 2 kHz to B input	– Depress ALT of S2 – Depress MTB of S4 – Adjust the input signals for a trace height of 6 div. approx.	Well triggered display of channel A	
			– Depress B of S31	Well triggered display of channel B	
			– Depress COMP of S31	Well triggered display of channel A and channel B	
4.4.8.2.	Trigger source EXT	Sine wave signal, 240 mV, 2 kHz to A input and EXT input X6	Depress EXT of S31	Well triggered display	
4.4.8.3.	Trigger source LINE	Sine wave signal, related to mains frequency to A input	Depress LINE of S31	Well triggered display	
4.4.8.4.	Slope	Sine wave signal, 120 mV, 2 kHz to A input		Signal triggers on positive going edge	
			– Pull SLOPE S13	Signal triggers on negative going edge	
			– Set R7/S14 to DUAL	Signal triggers on both edges (if necessary, adjust TIME/DIV control R13)	
4.4.8.5.	Sensitivity INT	Sine wave signal to A input frequency:			
		1 Hz	Depress DC of S5	Signal triggers at 0,5 div.	
		5 Hz	Depress AC of S5	Signal triggers at 0,5 div.	
		20 Hz	Depress AUTO of S5	Signal triggers at 0,5 div.	
		5 MHz		Signal triggers at 0,5 div.	
		50 MHz		Signal triggers at 1 div.	
4.4.8.6.	Sensitivity EXT	Sine wave signal to A input and EXT input X6 frequency:	Depress EXT of S31		
		5 MHz		Signal triggers at 0,15 Vp-p	
		50 MHz		Signal triggers at 0,2 Vp-p	
		5 MHz	Depress EXT ÷ 10 of S31	Signal triggers at 1,5 Vp-p	
		50 MHz		Signal triggers at 2 Vp-p	
4.4.8.7.	Sensitivity DUAL	Sine wave signal to A input frequency:	Set R7/S14 to DUAL	Signal triggers at 1 div.	
		5 MHz		Signal triggers at 1 div.	
		10 MHz		Signal triggers at 2 div.	

STEP	OBJECTIVE	INPUT VOLTAGE	SETTINGS	REQUIREMENTS	MEAS. RESULTS
4.4.8.8.	LEVEL range	Sine wave signal 120 mVp-p, 2 kHz to A input	LEVEL control R7 ↻	Trace is triggered in the most extreme positions of the LEVEL control	
			Depress DC of S5 LEVEL control R7 ↻	Trace is not triggered in the most extreme positions of the LEVEL control	
			AMPL/DIV to 10 mV LEVEL control R7 ↻	Trace is triggered in the most extreme positions of the LEVEL control (range ⩾ 8 div.)	
		Sine wave signal 2 Vp-p, 2 kHz to A input and EXT input X6	Depress EXT of S31 LEVEL control R7 ↻	Trace is triggered in the most extreme positions of the LEVEL control (range ⩾ 1,6 V)	
4.4.8.9.	EXT trigger input impedance	Sine wave signal 2 Vp-p, 2 kHz to A input and to EXT input via dummy	Depress EXT of S31 LEVEL control R7 ↻	Trace is not triggered in the most extreme positions of the LEVEL control	
		Sine wave signal 4 Vp-p, 2 kHz to A input and to EXT input via dummy	LEVEL control R7 ↻	Trace is triggered in the most extreme positions of the LEVEL control	
4.4.9.	**DTB TRIGGERING**				
4.4.9.1.	Trigger source	Sine wave signal, 10 kHz to A input and square wave signal, 2 kHz to B input	– Depress ALT of S2 – Depress DTB of S4 – Depress COMP of S31 – Adjust the input voltages for a trace height of 6 div. approx.	Well triggered display of channel A and channel B	
			– Depress A of S30	Well triggered display of channel A	
			– Depress B of S30	Well triggered display of channel B	
			– Depress COMP of S30	Well triggered display of channel A and channel B	
		Sine wave signal, 240 mV, 2kHz to A input and EXT input X5	– Depress EXT of S30	Well triggered display	
4.4.9.2.	SLOPE	Sine wave signal, 120 mV 2 kHz to A input	– Depress DC of S3 – Depress DTB of S4 – MTB TIME/DIV to 0,5 ms – DTB TIME/DIV to 0,2 ms – Depress A of S30	Signal triggers on positive going edge	
			– Pull SLOPE S11	Signal triggers on negative going edge	
4.4.9.3.	Sensitivity INT	Sine wave signal to A input frequency:	– Depress DC of S3	Signal triggers at 0,5 div.	
		1 Hz	– Depress DTB of S4 – Depress A of S30		
		5 Hz 5 MHz	– Depress DTB of S4	Signal triggers at 0,5 div.	
		50 MHz	– Depress A of S30 – Depress AC of S3	Signal triggers at 0,5 div. Signal triggers at 2 div.	
4.4.9.4.	Sensitivity EXT	Sine wave signal to A input and EXT input X5 frequency:	– Depress DC of S3 – Depress DTB of S4 – Depress EXT of S30		
		5 MHz		Signal triggers at 0,15 Vp-p	
		50 MHz		Signal triggers at 0,2 Vp-p	

STEP	OBJECTIVE	INPUT VOLTAGE	SETTINGS	REQUIREMENTS	MEAS. RESULTS
4.4.9.5.	LEVEL range	Sine wave signal 120 mVp-p, 2 kHz to A input	– Depress DC of S3 – Depress DTB of S4 – MTB TIME/DIV to 0,5 ms – DTB TIME/DIV to 0,2 ms – Depress A of S30 – LEVEL control R5	Trace is not triggered in the most extreme positions of the LEVEL control	
			– AMPL/DIV to 5 mV – LEVEL control R5	Trace is triggered in the most extreme positions of the LEVEL control (range ≥ 16 div.)	
		Sine wave signal 4 Vp-p, 2 kHz to A input and EXT input X5	– AMPL/DIV to 1 V – Depress EXT of S30 – LEVEL control R5	Trace is triggered in the most extreme positions of the LEVEL control (range ≥ 3,2 V)	
4.4.9.6.	EXT trigger input impedance	Sine wave signal 4 Vp-p, 2 kHz to A input and to EXT input X5 via dummy	– Depress DC of S3 – Depress DTB of S4 – Depress EXT of S30 – LEVEL control R5	Trace is not triggered in the most extreme positions of the LEVEL control	
		Sine wave signal 3 Vp-p, 2 kHz to A input and to EXT input X5 via dummy	– LEVEL control R5	Trace is triggered in the most extreme positions of the LEVEL control	
4.4.10.	**CALIBRATION**			Calibration voltage is 1,2 Vp-p Calibration frequency is ≈ 2 kHz square wave	
4.4.11.	**Z-MODULATION** (additional)	TTL compatible signal to Z-MOD input at the rearside		Logic "1" is normal intensity Logic "0" is blanked	
4.4.12.	**MEMORY**		**Release MEMORY OFF S1**		
4.4.12.1.	View time		– Pull AUTO ERASE S9 – VIEW TIME control R1	Auto erase every 1 sec.	
			– VIEW TIME control R1	Auto erase every 10 sec. Erase time 1,3 sec approx.	
4.4.12.2.	PERSISTENCE and storage time	Sine wave signal 120 mVp-p, 2 kHz to A input	– Depress SINGLE S6 – PERSISTENCE control R14 – Depress ERASE S8	Stored signal clearly visible after 0,5 sec.	
			– PERSISTENCE control R14 (not MAX WRITE) – Depress ERASE S8	Stored signal clearly visible after 60 sec.	
			– Depress ERASE S8 – Depress READ S15 – BRIGHTNESS control R1	Signal clearly visible after 60 min.	
			– R14/S25 in MAX WRITE – Depress ERASE S8	Stored signal clearly visible after 30 sec.	
4.4.12.3.	BRIGHTNESS	as 4.4.12.2	– Depress SINGLE S6 – PERSISTENCE control R14 – Depress ERASE S8 – Depress READ S15 – BRIGHTNESS control R1	– No signal visible (0 % brightness)	
			– BRIGHTNESS control R1	– Signal fully visible (100 % brightness)	
4.4.12.4.	Writing speed	Sine wave signal 1,6 Vp-p, 2 kHz to A input	– Depress SINGLE S6 – MTB TIME/DIV to 0,1 ms – AMPL/DIV to 50 mV – PERSISTENCE control R14 – Depress ERASE S8	Screen is written for at least 80 % (i.e. ≥ 64 div.)	
		Sine wave signal 1,6 Vp-p, 20 kHz to A input	– R14/S25 in MAX WRITE – Depress ERASE S8 – MTB TIME/DIV to 0,1 ms	Screen is written for at least 80 % (i.e. ≥ 64 div.)	

5. CHECKING AND ADJUSTING

> **WARNING:** The opening of covers or removal of parts, except those to which access can be gained by hand, is likely to expose live parts, and also accessible terminals may be live.
> The instrument shall be disconnected from all voltage sources before any adjustment, replacement or maintenance and repair during which the instrument will be opened.
> If afterwards any adjustment, maintenance or repair of the opened instrument under voltage is inevitable, it shall be carried out only by a skilled person who is aware of the hazard involved.
> Bear in mind that capacitors inside the instrument may still be charged even if the instrument has been separated from all voltage sources.

5.1. GENERAL INFORMATION

The following information provides the complete checking and adjusting procedure for the oscilloscope. As various control functions are interdependent, a certain order of adjustment is often necessary.
The procedure is, therefore, presented in a sequence which is best suited to this order, cross-reference being made to any circuit which may affect a particular adjustment.
Before any check or adjustment, the instrument must attain its normal operating temperature.

- Where possible, instrument performance is checked before an adjustment is made.
- Warming-up time under average conditions is 30 minutes.
- All limits and tolerances given in this section are calibration guides and should not be interpreted as instrument specifications unless they are also published in chapter 1.2. characteristics.
- Tolerances given are for the instrument under test and do not include test equipment error.
- The most accurate display adjustments are made with a stable, well-focused, low-intensity display. Unless otherwise noted, adjust the Intensity, Focus and Trigger Level controls as needed.
- Unless otherwise noted the controls occupy the same position as in the previous check.

5.2. RECOMMENDED TEST EQUIPMENT

As indicated in chapter 4.3.
Additional equipment for the checking and adjusting procedure:
Digital multimeter e.g. PM 2522 (A).
Trimming tool set e.g. Philips 800 NTX.

5.3. PRELIMINARY SETTINGS OF THE CONTROLS

As indicated in chapter 4.2.

5.4. SURVEY OF ADJUSTING ELEMENTS AND AUXILIARY EQUIPMENT

ADJUSTMENT	ADJUSTING ELEMENT	ADJUSTING RESULT	RECOMMENDED INSTRUMENT AND INPUT SIGNALS	CHAPTER	FIGURES
Power supply					
Supply voltage adjustment	R1601	+12 V, + or −0.25 V	Digital multimeter	5.5.1.	5.3.
Intensity range	R1650	Max. range on pt 7 of converter transformer +40 V and −40 V	Digital multimeter	5.5.1.	5.3.
Cut off voltage	R1617	Cuts off at +20 V battery supply	Battery supply	5.5.1.	5.3.
Storage					
Intensity	R1532	Spot just not visible	–	5.5.2.	5.2.
Voltage G9	R1463	Voltage on G9 is +3 V	Digital multimeter	5.5.2.	5.2.
Collimator	R1394, R1347 and R1342	Background ill. divided over screen and borders just out of screen	–	5.5.2.	5.2.
Normal write mode	R1458	Background ill. just visible	–	5.5.2.	5.2.
	R1351 and R1338	Background ill. divided over screen	–		
Max. write mode	R1357	Borders just out of screen	–	5.5.2.	5.2.
	R1438	Brightness is 10 % approx.	–		5.2.
	R1419	Background ill. on left half and right half is equal	–	5.5.2.	5.2.
Intensity	R1532	Screen remains dark ⩾ 1 min.	–	5.5.2.	5.2.
Cathode-ray tube circuit					
Intens ratio	R1506	DTB-trace must be well distinguished from MTB-trace	–	5.5.3.	5.2.
Trace ratio	R15	Trace runs exactly in parallel with horizontal graticule lines	–	5.5.3.	
Focus and astigmatism	R1546	Sharp and well-defined trace	Function generator, sine wave signal 10 kHz	5.5.3.	5.3.
Geometrie	R1552	Displayed vertical lines as straight as possible and signal must fall in shown area	Function generator, sine wave signal 10 kHz	5.5.3.	5.3.
Y-amplifier balance					
DC balance	R3061 (R406)	Minimum jump when switching 10 mV – 20 mV	–	5.5.4.	5.2.
Gain balance	R316 (R416)	Minimum jump when rotating AMPL/DIV control	–	5.5.4.	5.2.
Normal/invert balance ch. B	R449	Minimum jump when switching normal-invert	–	5.5.4.	5.2.
Shift balance	R349 (R476)	Sine wave displayed distortion free	Function generator, sine signal 10 kHz	5.5.4.	5.2.
Trigger balances					
A balance	R801 and R701	Starting point DTB and MTB is the same	Function generator, sine wave signal 2 kHz	5.5.5.	5.1.
B balance	R808 and R708	Starting point DTB and MTB is the same	Function generator, sine wave signal 2 kHz	5.5.5.	5.1.
COMP balance	R804 and R704	Starting point DTB and MTB is the same	Function generator, sine wave signal 2 kHz	5.5.5.	5.1.
Time base generators					
MTB time coefficients	R1224	Display does not move in horizontal direction	Function generator, TTL signal 10 Hz and time marker generator, time marker pulse 1 µsec	5.5.6.	5.2.
	R1217	Centre 8 cycles occupy 8 divisions	Time marker generator, time marker pulse 1 µsec	5.5.6.	5.2.
	R1216	Centre 8 cycles occupy 8 divisions	Time marker generator, time marker pulse 0.1 µsec	5.5.6.	5.2.
	R944	Centre 8 cycles occupy 8 divisions	Time marker generator, time marker pulse 1 msec	5.5.6.	5.2.
	C1204 and C1209	Beginning of time-base as lineair as possible	Time marker generator, time marker pulse 10 nsec	5.5.6.	5.2.
DTB time coefficients	R1037	Centre 8 cycles occupy 8 divisions	Time marker generator, time marker pulse 1 µsec	5.5.6.	5.2.
	R1042	Centre 8 cycles occupy 8 divisions	Time marker generator, time marker pulse 0.1 msec	5.5.6.	5.2.
Delay time multiplier	R1002	DTB spot on the second time marker pulse	Time marker generator, time marker pulse 1 µsec	5.5.6.	5.2.
	R1001	DTB spot on the tenth time marker pulse	Time marker generator, time marker pulse 1 µsec	5.5.6.	5.2.

ADJUSTMENT	ADJUSTING ELEMENT	ADJUSTING RESULT		RECOMMENDED INSTRUMENT AND INPUT SIGNALS	CHAPTER	FIGURES
Trace separation	R1420	Difference between MTB trace and DTB trace at least 3 div.		–	5.5.6.	5.2.
Vertical channels						
Gain pre-adjustment	R642	Display does not move in vertical direction		Function generator, TTL signal 10 Hz and function generator, square wave signal 2 kHz	5.5.7.	5.2.
Gain sensitivity x1	R647 (R347)	Signal occupies 6 divisions		Function generator, square wave signal 2 kHz	5.5.7.	5.2.
Gain sensitivity x10	R422 (R322)	Signal occupies 6 divisions		Function generator, square wave signal 2 kHz	5.5.7.	5.2.
Square wave response attenuators	C211 (111) C209 (109) C206 (106) C216+C214 (C116+C114) C221+C219 (C121+C119)	Optimal square wave response, pulse top errors + or −0.5 subdiv and trace height 6 div + or − 0.5 subdiv	AMPL/DIV 20 mV AMPL/DIV 50 mV AMPL/DIV 0.1 V AMPL/DIV 0.2 V AMPL/DIV 2 V frequency	Square wave calibration generator, frequency 10 kHz and risetime ⩽ 100 nsec.	5.5.7.	5.2.
Square wave response final amplifier	R612 R611 R613 C609 C611 R616 C609 C611 L601 L602 C409 (C309) C621	Optimal square wave response, pulse top errors + or −0.5 subdiv and rise time ⩽ 7 nsec.	10 kHz 100 kHz 100 kHz - 1 MHz 100 kHz - 1 MHz 100 kHz - 1 MHz 1 MHz 1 MHz 1 MHz 1 MHz 1 MHz 1 MHz 1 MHz	Square wave calibration generator, frequency 10 kHz - 1 MHz and rise time ⩽ 7 nsec	5.5.7.	5.2.
	C404 (C304)	Optimal square wave response, max. error 0.5 subdiv. frequency 1 MHz				
Cross talk	R612 and R611	Minimum cross talk		Square wave calibration generator, frequency 10 kHz, risetime ⩽ 3 nsec	5.5.7.	5.2.
Triggering						
Trigger sensitivy	R749 R829	MTB-DTB trace is triggered		Function generator, square wave signal 2 kHz	5.5.8.	5.2.
Calibration						
Calibration voltage	R1561	Square wave voltage op 1.2 Vp-p ± 0.7 %		–	5.5.10.	5.2.
Storage section						
Max. write	R1438	Screen is written for at least 80 %		Function generator, sine wave signal 10 kHz	5.5.11.	5.2.
	R1463	Screen clearly visible after 1 min.		Function generator, sine wave signal 10 kHz	5.5.11.	5.2.

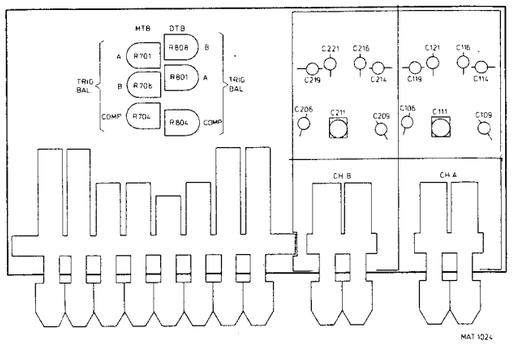

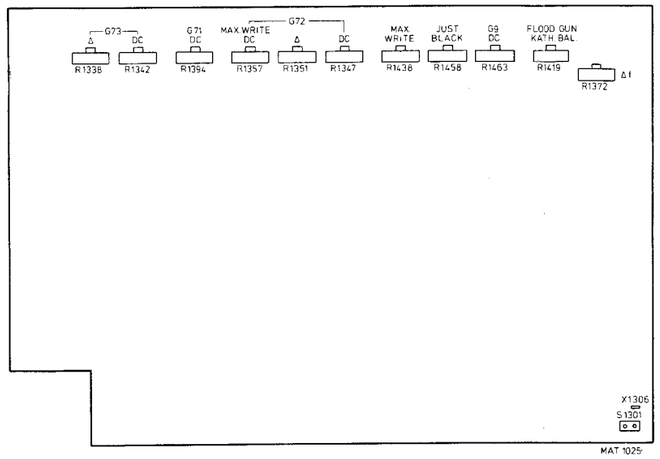

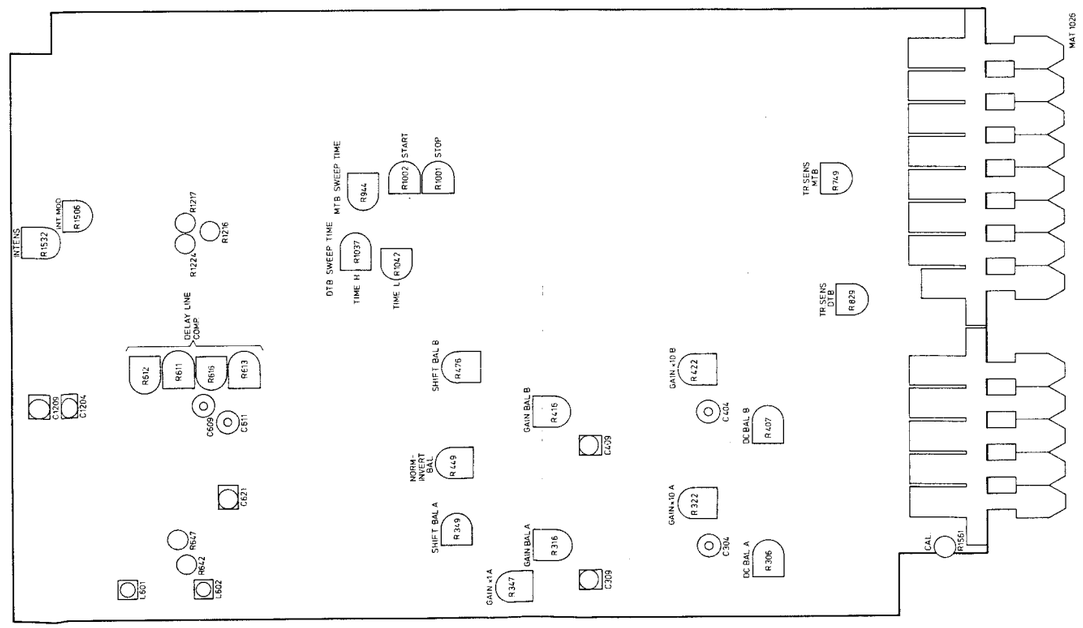

5.5. CHECKING AND ADJUSTING PROCEDURE

5.5.1. Power supply

Mains current

- Check that the mains voltage adapter has been set to the **local** mains voltage and connect the instrument to such a voltage.
- Switch the oscilloscope on and check that the pilot lamp on the front panel lights up.
- Check that the current consumption does not exceed 210 mA at 220 V local mains and 375 mA at 110 V local mains. (Measured with a moving iron meter.)

Supply voltages (Fig. 5.3.)

- Check that the voltage on X1612 pt7 is +12 V, + or -0,25 V; if necessary, readjust potentiometer R1601.
- Check the supply voltages in accordance with the following table:

Voltage	Measuring point	Required value	Max. allowable ripple
+5 V	X1612 pt4	+4,9 V to +5,2 V	5 mVp-p
+12 V	X1612 pt7	+11,75 V to + 12,25 V	5 mVp-p
-12 V	X1612 pt3	-11,75 V to -12,25 V	5 mVp-p
+38 V	X1612 pt5	+37 V to +39 V	100 mVp-p
+60 V	X1612 pt2	+55 V to +65 V	100 mVp-p
-60 V	X1612 pt6	-55 V to -65 V	100 mVp-p
+180 V	X1612 pt1	+176 V to +183 V	600 mVp-p
-180 V	X1613 pt1	-176 V to -183 V	600 mVp-p

- Vary the a.c. voltage to which the instrument is connected with + or -10 % of the nominal voltage.
- Check that the supply voltage does not vary more than 2 %.

Intensity range

- Turn the INTENS control R17 fully clockwise and fully anti-clockwise.
- Check that the voltage on point 7 of the converter transformer does not exceed the +40 V and -40 V range; if necessary, readjust potentiometer R1650.

Cut-off voltage

- Disconnect the mains voltage and apply a battery supply of 20 V to the battery input socket at the rear side of the instrument.
- Adjust potentiometer R1617 so that the power supply cuts off.
- Remove the battery supply and connect the mains voltage again.

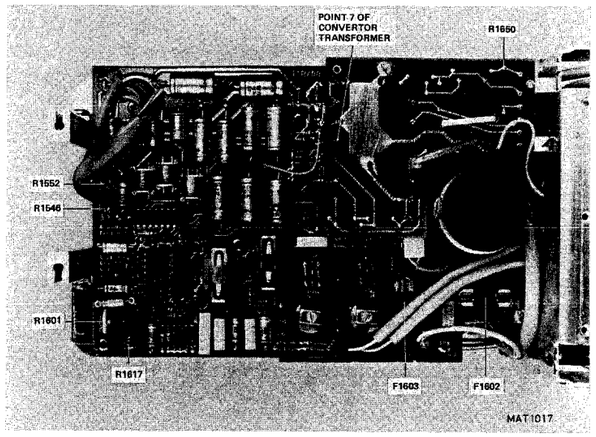

Fig. 5.3.

5.5.2. Storage

Intensity

- Set the controls as indicated in Fig. 4.1.
- Set the MTB TIME/DIV switch S23 to X DEFL.
- Set the INTENS control R17 to 45° from its left hand stop.
- Adjust potentiometer R1532 so that the spot is just not visible.
- Turn the INTENS control R17 fully anti-clockwise.

G9

- Release MEMORY OFF S1.
- Set the PERSISTENCE control R14 fully clockwise (not in MAX. WRITE).
- Check that the voltage on G9 is +3 V; if necessary, readjust potentiometer R1463.

Collimator

- Set the PERSISTENCE control R14 fully anti-clockwise.
- Check that the background illumination is divided as equal as possible over the whole screen area and that the borders of the background are just out of the screen. If necessary, readjust potentiometers R1347 G72DC), R1342 (G73DC) and R1394 (G71DC).

Norm. write mode

- Set the PERSISTENCE control R14 fully clockwise (not in MAX. WRITE).
- Depress ERASE S8 and check that the background illumination is just visible; if necessary, readjust potentiometer R1458 (JUST BLACK).
- Check that the background illumination is divided as equal as possible over the whole screen area; if necessary, readjust potentiometers R1351 (△G71) and R1338 (△G73)
- Depress ERASE S8 and check that the background illumination is just not visible; if necessary, readjust potentiometer R1458 (JUST BLACK).
- Check that the background illumination of the left half and the right half of the C.R.T. screen is equal; if necessary, readjust potentiometer R1419 (CATH.BAL.).

Max. write mode

- Set the PERSISTENCE control R14-S25 to MAX. WRITE.
- Depress ERASE S8 and check that the borders of the background illumination are just out of the screen; if necessary, readjust potentiometer R1357. (DC MAX.WRITE) Only during 500 ms erase.
- Check that the brightness of the background illumination is approx. 10 % of the fully brightness; if necessary, readjust potentiometer R1438. (MAX.WRITE).
- Check that the background illumination of the left half and the right half of the C.R.T. screen is equal; if necessary, readjust potentiometer R1419 (CATH. BAL.).

Intensity

- Set the INTENS control R17 to 30° from its left-hand stop.
- Depress ERASE S8 and check that the screen remains dark for at least 1 min.; if necessary, readjust potentiometer R1532.
- Depress MEMORY OFF S1.

5.5.3. Cathode-ray tube circuit

Intens ratio

- Set the controls as indicated in Fig. 4.1.
- Set DTB TIME/DIV switch to 0,1 ms/div.
- Depress MTB of S4.
- Set the INTENS control R17 to 180° from its eft-hand stop.
- Check that the MTB trace is just visible; if necessary, readjust potentiometer R1506.

Trace rotation

- Set MTB TIME/DIV switch to 0,1 ms/div.
- Set DTB TIME/DIV switch to OFF.
- Centre the time-base line using the A POSITION control R2.
- Check that the time-base line runs exactly in parallel with the horizontal graticule lines; if necessary, readjust the front panel TRACE ROTATION potentiometer R15.

Focus and astigmatism

- Set A AMPL/DIV switch to 0,1 V/div.
- Set MTB TIME/DIV to 50 μs/div.
- Apply a sine-wave voltage of approx. 600 mVp-p, 10 kHz to the A input socket X2.
- Set the INTENS control R17 for normal brightness.
- Adjust the FOCUS control R16 for a sharp and well-defined trace over the whole screen area; if necessary, readjust potentiometer R1546 (astigmatism).

Geometrie

- Set MTB TIME/DIV switch to 0,1 ms/div.
- Apply a sine-wave voltage of 1,2 Vp-p, 10 kHz to the channel A-input X2.
- Check that the displayed vertical lines are as straight as possible and that the signal falls between 95x76 mm^2 and 93x73.6 mm^2; if necessary, readjust potentiometer R1552.
- Remove the input signal.

5.5.4. Y-amplifier balance

General information

The adjustments of the vertical amplifier channels A and B are identical. The knobs, sockets and adjusting elements of channel B are shown in brackets after those of channel A.

D.C. balance

- Set the controls as indicated in Fig. 4.1.
- Depress A (B) of S2.
- Depress O of S27 and S29.
- Centre the trace using the A (B) POSITION control R2 (R3).
- Check that the trace does not jump if AMPL/DIV switch S17 (S19) is rotated; if necessary, readjust potentiometer R316 (R416).

Gain balance

- Depress A (B) of S2.
- Check that the trace does not move when the AMPL/DIV control R8 (R9) is rotated; if necessary, readjust potentiometer R316 (R416).

Normal/invert balance channel B

- Depress B of S2.
- Check that the trace does not jump when PULL TO INVERT switch S10 is switched between normal and invert; if necessary, readjust potentiometer R449.

Shift balance

- Depress A (B) of S2.
- Depress A (B) of S31.
- Set the MTB TIME/DIV switch to 50 µs/div.
- Release O of S27 and S29.
- Apply a sine-wave voltage of 480 mV/p-p, 10 kHz to the A (B) input socket X2 (X3).
- Check if the extremes of the sine-wave can be displayed distortion free on the screen by rotating the A (B) POSITION control R2 (R3); if necessary, readjust potentiometer R349 (R476).
- Remove the input signal.

5.5.5. Trigger balances

A-balance

- Set the controls as indicated in Fig. 4.1.
- Depress ALT of S2.
- Release S26 and S28 to DC.
- Set the A AMPL/DIV switch and B AMPL/DIV switch to 0,1 V/div.
- Set the DTB TIME/DIV switch to 50 µs/div.
- Depress AC of S3.
- Depress MTB and DTB (= ALT TB) of S4.
- Depress A of S30.
- Turn the TRACE SEPARATION control R12 to its left-hand stop.
- Shift both traces to the central horizontal graticule line using the A and B position controls R2 and R3.
- Apply a sine-wave voltage of 480 mVp-p, 2 kHz to both A and B input sockets X2 and X3.
- Depress AC of S5.
- Set the DTB LEVEL control R5 and the MTB LEVEL control R7 in such a way that the DTB and MTB start at a point on the central horizontal graticule line.
- Depress DC of S3.
- Depress DC of S5.
- Check that the starting point of the DTB and MTB is the same as above; if necessary, readjust potentiometers R801 (DTB) and R701 (MTB).

B-balance

- Depress B of S30.
- Depress B of S31.
- Check that the starting point of the DTB and MTB is again the same as above; if necessary, readjust potentiometers R808 (DTB) and R708 (MTB).

Comp-balance

- Depress A and B (= COMP) of S30.
- Depress A and B (= COMP) of S31.
- Check that the starting point of the DTB and MTB is again the same as above; if necessary, readjust potentiometers R804 (DTB) and R704 (MTB).
- Remove the input signal.

5.5.6. Time-base generators

MTB time coefficients

- Set the controls as indicated in Fig. 4.1.
- Set the MTB TIME/DIV switch to 1 μs/div.
- Depress DC of S3.
- Depress MTB of S4.
- Release S26 to DC.
- Apply a time-marker voltage with a repetition time of 1 μs and an amplitude of 80 mVp-p to the A input socket X2.
- Remove jumper S1301 and apply a TTL-signal of 10 Hz to X1306 on the storage unit.
- Shift the last pulse just inside the screen using the X POSITION control R6.
- Check that the display does not move in horizontal direction; if necessary, readjust potentiometer R1224.
- Remove the TTL-signal and replace the jumper S1301.
- Check that the central 8 cycles occupy 8 divisions; if necessary, readjust potentiometer R1217.
- Pull the X MAGN switch S12 to x10.
- Change the repetition time of the applied input signal to 0,1 μs.
- Check that the central 8 cycles occupy 8 divisions; if necessary, readjust potentiometer R1216.
- Push the X MAGN switch S12 to x1.
- Set the MTB TIME/DIV switch to 1 ms/div.
- Change the repetition time of the applied input signal to 1 ms.
- Check that the central 8 cycles occupy 8 divisions; if necessary, readjust potentiometer R944.
- Pull the X MAGN switch S12 to x10.
- Set the MTB TIME/DIV switch to 0,1 μs/div.
- Change the repetition time of the applied input signal to 10 ns.
- Set the X POS control R6 fully clockwise.
- Check that the beginning of the time-base is as linear as possible; if necessary, readjust trimmers C1204 and C1209.
- Push the X MAGN switch S12 to x1.
- Check all MTB TIME/DIV switch positions.
  The repetition time of the applied input signal should correspond to the position of the MTB TIME/DIV switch. The central 8 cycles should always occupy 8 divisions: tolerance + or -1 subdivision (2 subdivisions with the X MAGN switch S12 to x10).
- Check that in all the positions of the MTB TIME/DIV switch, the time-base length is at least 10 divisions.
- Check the control range of the MTB TIME/DIV potentiometer R13 in the position 0,2 ms/div of the MTB TIME/DIV switch. The range must be between 1 : 2,6 and 1 : 3,5.

DTB time coefficients

- Turn potentiometer DELAY TIME R4 to its left-hand stop.
- Set the MTB TIME/DIV switch to 2 μs/div.
- Set the DTB TIME/DIV switch to 1 μs/div.
- Depress DTB of S4.
- Depress A of S30.
- Apply a time-marker voltage with a repetition time of 1 μs. and an amplitude of 80 mVp-p to the A-input socket X2.
- Check that the central 8 cycles occupy 8 divisions; if necessary, readjust potentiometer R 1037.
- Set the MTB TIME/DIV switch to 0,2 ms/div.
- Set the DTB TIME/DIV switch to 0,1 ms/div.
- Change the repetition time of the applied input signal to 0,1 ms.
- Check that the central 8 cycles occupy 8 divisions; if necessary, readjust potentiometer R1042.
- Check all the other positions of the DTB TIME/DIV switch. The repetition time of the applied input signal should correspond to the position of the DTB TIME/DIV switch. The position of the MTB TIME/DIV switch should be always one step lower.
  The central 8 cycles should always occupy 8 divisions: tolerance + or - 1 subdivision.
- Check the control range of the DTB TIME/DIV potentiometer R10 in the position 0,2 ms/div of the DTB TIME/DIV switch. The range must be between 1 : 2,6 and 1 : 3,5.

Delay time multiplier

- Set the MTB TIME/DIV switch to 1 μs/div.
- Set the DTB TIME/DIV switch to 0,2 μs/div.
- Depress MTB of S4.
- Depress MTB of S30.
- Apply a time-marker voltage with a repetition time of 1 μs and an amplitude of 80 mV p-p to the A input socket X2.
- Set the DELAY TIME control R4 to 1.00.
- Check that the intensified spot on the trace coincides with the starting point of the second time marker pulse; if necessary, readjust potentiometer R1002.
- Set the DELAY TIME control R4 to 9.00.
- Check that the intensified spot on the trace coincides with the starting point of the tenth time marker pulse; if necessary, readjust potentiometer R 1001.
- As both adjustments are slightly interdependent, they must be repeated until both conditions are fullfilled.
- Remove the input signal.

Trace separation

- Set the MTB TIME/DIV switch to 50 μs/div.
- Set the DTB TIME/DIV switch to 20 μs/div.
- Depress DTB and MTB (= ALT TB) of S4.
- Set the DELAY TIME control R4 to 1.00.
- Turn the TRACE SEP control R12 fully anti-clockwise.
- Check that the two traces overlap each other.
- Turn the TRACE SEP control R12 fully clockwise.
- Check that the difference between the two traces is at least 3 divisions; if necessary, readjust potentiometer R1420.

Hold off

- Depress MTB of S4.
- Set the MTB TIME/DIV switch to 1 μs/div.
- Set the DTB TIME/DIV switch to OFF.
- Turn the HOLD OFF control R11 fully clockwise.
- Turn the HOLD OFF control slowly anti-clockwise and check that the brightness of the trace decreases. Also check that the starting point of the trace does not change.

5.5.7. Vertical Channels

General Information

The adjustments of the vertical amplifier channel A and B are identical. The knobs, sockets and adjusting elements of channel A are shown in brackets after those of channel B.

Auto store correction

- Set the controls as indicated in Fig. 4.1.
- Set te B AMPL/DIV switch to 10 mV/div.
- Release S28 to DC.
- Set the MTB TIME/DIV switch to 0,2 μs/div.
- Depress B of S2.
- Depress MTB of S4.
- Depress B of S31.
- Apply a square-wave voltage of 120 mV, frequency 2 kHz to the channel B input X3.
- Remove jumper S1301 and apply a TTL-signal of 10 Hz to X1306 on the storage unit.
- Shift the signal just inside the screen using the channel B AMPL/DIV control R9.
- Check that the display does not move in vertical direction; if necessary, readjust potentiometer R642.
- Remove the TTL-signal and replace jumper S1301.
- Set the B AMPL/DIV control R9/S220 to its CAL position.

Gain sensitivity x1

- Depress B (A) of S2.
- Release S28 and S26 to DC.
- Set B (A) AMPL/DIV switch to 20 mV/div.
- Set MTB TIME/DIV switch to 0,2 ms/div.
- Depress B (A) of S31.
- Apply a square-wave voltage of 120 mVp-p frequency 2 kHz, to the B (A) input socket X3 (X2).
- Check that the signal occupies 6 divisions; if necessary, readjust potentiometer R647 (R347).
- Repeat the measurement for channel A.

Gain sensitivity x10

- Depress B (A) of S2.
- Set B (A) AMPL/DIV switch to 2 mV/div.
- Depress B (A) of S31.
- Apply a square-wave voltage of 12 mVp-p, frequency 2 kHz, to the B (A) input socket X3 (X2).
- Check that the signal occupies 6 divisions; if necessary, readjust potentiometer R422 (R322).
- Repeat the measurement for channel A.

Square-wave response attenuators

- Depress B (A) of S2.
- Set the MTB TIME/DIV switch to 20 μs/div.
- Depress B (A) of S31.
- Apply a square-wave voltage with an amplitude as indicated in the following table, a frequency of 10 kHz and a risetime $\leqslant$ 100 ns to the B (A) input socket X3 (X2).
- Check that the pulse top errors do not exceed + or -0,5 subdisivion and that the trace height is 6 divisions + or -0,5 subdivision; if necessary, readjust the relevant trimmers.

B (A) Ampl.	YB (YA) input signal	Adjuster
2 mV	12 mV	
5 mV	30 mV	
10 mV	60 mV	
20 mV	120 mV	C211 (C111)
50 mV	300 mV	C209 (C109)
0,1 V	600 mV	C206 (C106)
0,1 V	1,2 V	C216 + C214 (C116 + C114)
0,5 V	3 V	
1 V	6 V	
2 V	12 V	C221 + C219 (C121 + C119)
5 V	30 V	
10 V	60 V	

- Remove the input signal.

Input capacitance

– Apply a square-wave voltage with an amplitude as indicated in the following table, frequency 10 kHz and rise time ⩽ 100 ns to the B (A) input socket X3 (X2) via a dummy probe.

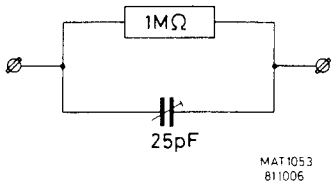

Dummy probe
2 : 1 // 25pF

– Check that the pulse top errors do not exceed + or - 0,5 subdivision and that the trace height is 6 divisions + or - 0,5 subdivision.

B (A) Ampl.	YB (YA) input signal	Adjuster
2 mV	24 mV	Cv dummy
5 mV	60 mV	Cv dummy
10 mV	120 mV	Cv dummy

– Check that the difference in input capacitance do not exceed 1 pF.
– Remove the input signal.

Square-wave response final amplifier

– Depress B of S2.
– Set the B AMPL/DIV switch to 20 mV/div.
– Depress B of S31.
– Apply a square-wave voltage of 120 mVp-p, risetime ⩽ 3 ns to the B input socket X3. The frequency should be in accordance with the table below.
– Check the square-wave response; pulse top errors may not exceed 0,5 subdivision and the rise time may not exceed 7 ns.

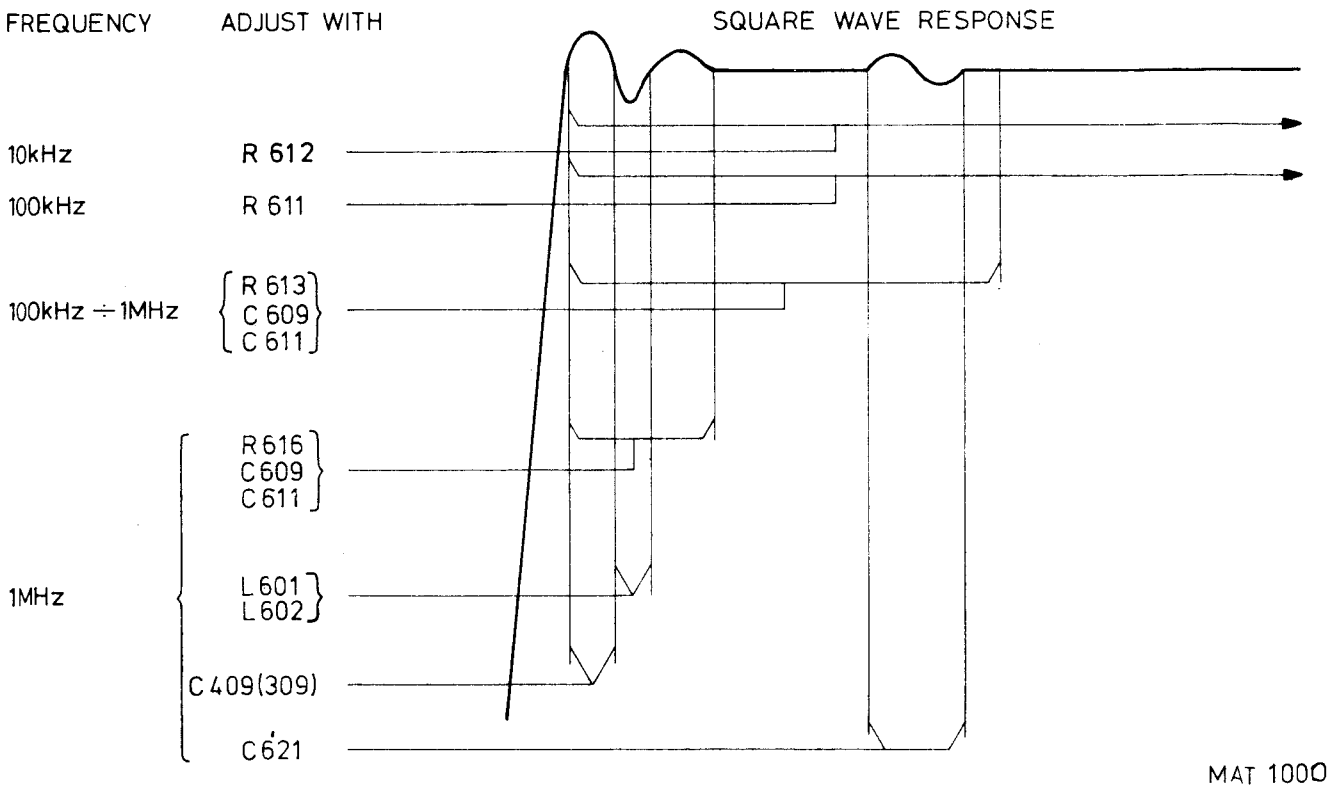

* L601 and L602 should be operated simultaneously and in the same direction and by the same amount. If necessary repeat above adjustments until the best response is obtained.

– Check and readjust the square-wave response according to the table below.

Channel	*AMPL/DIV*	*Input signal*	*Trace height*	*Rep rate*	*TIME/DIV*	*Adj. with*	*Max. error*
B	2 mV/div.	12 mV	6 div.	1 MHz	.2 μs	C404	0,5 subdivision
A	20 mV/div.	120 mV	6 div.	1 MHz	.2 μs	C309	0,5 subdivision
A	2 mV/div.	12 mV	6 div.	1 MHz	.2 μs	C304	0,5 subdivision

Cross talk

– Depress CHOP of S2.
– Set the A and B AMPL/DIV switches to 20 mV/div.
– Set the MTB TIME/DIV switch to 0,5 ms/div.
– Depress O of S27.
– Depress B of S31.
– Apply a square-wave voltage of 120 mVp-p, frequency 10 kHz and a rise time ⩾ 3 ns to the B input socket X3.
– Check that the crosstalk between both channels is as small as possible; if necessary, readjust potentiometers R612 and R611.
– Remove the input signal.

Bandwidth

– Depress A (B) of S2.
– Set A (B) AMPL/DIV switch to 2 mV/div.
– Set MTB TIME/DIV switch to 0,1 ms/div.
– Release O of S27 and S29.
– Depress A (B) of S31.
– Apply a sine-wave signal of 12 mVp-p, frequency 100 kHz and risetime ⩽ 3 ns to the A (B) input socket X2 (X3).
– Check that the trace height is 6 div.
– Increase the frequency of the input signal to 50 MHz and check that the trace height is at least 4,2 div at all input frequencies to 50 MHz.
– Repeat the measurement for channel B.

Common-mode rejection

– Depress ADD of S2.
– Pull S10 to INVERT.
– Set A and B AMPL/DIV switches to 20 mV/div.
– Apply a sine-wave signal of 480 mVp-p frequency 1 MHz to both A and B input sockets X2 and X3.
– Check that the rejection factor is ⩾ 100x.
– Increase the frequency of the input signal to 10 MHz.
– Check that the rejector factor is ⩾ 50x.
– Push S10 to NORM.
– Remove the input signal.

Alternate and chopped mode

– Depress ALT of S2.
– Set MTB TIME/DIV switch to 10 ms.
– Depress O of S27 of S29.
– Check that the two traces are displayed alternately.
– Depress CHOP of S2.
– Check that the two traces are displayed simultaneously.

5.5.8. Triggering

Trigger sensitivity

- Set the controls as indicated in Fig. 5.1.
- Depress AC of S3.
- Depress DTB and MTB (= ALT TB) of S4.
- Set MTB TIME/DIV switch to 0,5 ms/div.
- Set DTB TIME/DIV switch to 0,2 ms/div.
- Depress A of S30.
- Set the TRACE SEP control R12 fully clockwise.
- Apply a sine-wave signal of 14 mVp-p, frequency 2 kHz to the A input socket X2.
- Set the DTB LEVEL control to its mid-position.
- Check that the MTB trace is triggered; if necessary, readjust potentiometer R747.
- Check that the DTB trace is triggered; if necessary, readjust potentiometer R829.

Trigger level internal

- Depress AC of S5.
- Push the MTB and DTB slope switches S13 and S11 to the + position.
- Apply a sine-wave signal of 80 mVp-p, frequency 2 kHz to the A-input socket X2.
- Check that the traces start with a positive-going edge.
- Pull the MTB and DTB SLOPE switches S13 and S11 to the – position.
- Check that the traces start with a negative-going edge.
- Check that the starting points of the traces move upwards when the MTB and DTB LEVEL controls R7 and R 5 are turned clockwise.
  Both traces may not be triggered if the MTB and DTB LEVEL controls are set in their both extreme positions.
- Increase the amplitude of the applied input signal to 400 mVp-p.
- Check that both traces are triggered if the MTB and DTB LEVEL controls are set in their both extreme positions.

Trigger level auto

- Depress MTB of S4.
- Depress AC and DC (= AUTO) of S5.
- Apply a sine-wave signal for a trace equivalent of 6 divisions, frequency 100 Hz to the A input socket X2.
- Check that the starting point of the sine-wave can be shifted across approx. 3 divisions with the aid of the MTB LEVEL control R7.

Trigger level EXT and EXT ÷ 10

- Depress AC of S5.
- Depress EXT of S31.
- Apply a sine-wave signal of 800 mVp-p, frequency 2 kHz to the A input socket X2 and the EXT input socket X6.
- Check that the starting point of the sine-wave can be shifted across the entire amplitude with the aid of the MTB LEVEL control R7.
- Depress EXT ÷ 10 S31.
- Increase the input voltage to 8 Vp-p.
- Check that the starting point of the sine-wave can be shifted across the entire amplitude with the aid of the MTB LEVEL control R7.

Trigger sensitivity MTB

- Apply a sine-wave signal with a frequency as given in the table below, to the A-input X2; B-input X3 or EXT input X6.
- Adapt the setting of MTB TIME/DIV switch to the frequency of the input signal.
- Check the trigger sensitivities in accordance to the table below.

Signal to	*Frequency*	*S31*	*S5*	*Trace height*
YA	10 Hz	A	AUTO	⩽ 0,7 div
YA	10 kHz	A	AUTO	⩽ 0,7 div
YA	50 MHz	A	AUTO	⩽ 0,8 div
YA	20 Hz	A	AC	⩽ 0,7 div
YA	50 MHz	A	AC	⩽ 0,8 div
YA	50 MHz	A	DC	⩽ 0,8 div
YB	20 Hz	B	DC	⩽ 0,7 div
YB	50 MHz	B	DC	⩽ 0,8 div
YB	50 MHz	COMP	DC	⩽ 0,8 div
EXT	20 Hz	EXT	DC	⩽ 140 mV
EXT	50 MHz	EXT	DC	⩽ 140 mV
EXT	50 MHz	EXT ÷ 10	DC	⩽ 1,4 V

Trigger sensitivity DTB

- Depress DTB of S4.
- Depress AC + DC (= AUTO) of S5.
- Apply a sine-wave signal with a frequency as given in the table below, to the A-input X3; B-input X4 or EXT input X5.
- Adapt the setting of MTB and DTB TIME/DIV switches to the frequency of the input signal.
- Check the trigger sensitivities in accordance to the table below.

Signal to	*Frequency*	*S31*	*S5*	*Trace height*
YA	20 Hz	A	AC	⩽ 0,7 div.
YA	50 MHz	A	AC	⩽ 1,4 div.
YA	50 MHz	A	DC	⩽ 1,4 div.
YB	20 Hz	B	DC	⩽ 0,7 div.
YB	50 MHz	B	DC	⩽ 1,4 div.
YB	50 MHz	COMP	DC	⩽ 1,4 div.
EXT	20 Hz	EXT	DC	⩽ 140 mV
EXT	50 MHz	EXT	DC	⩽ 180 mV

- Remove the input signal.

Line-triggering

- Depress A of S2.
- Depress MTB of S4.
- Depress AC + DC (= AUTO) of S5.
- Set the A AMPL/DIV switch to 20 mV/div.
- Set the MTB TIME/DIV switch to 2 ms/div.
- Set the DTB TIME/DIV switch to OFF
- Release S26 to DC.
- Depress B of S31.
- Apply a mains voltage derived signal of 10 mVp-p via a mains transformer to the A input X2.
- Check that the trace is not triggered.
- Depress EXT and EXT ÷ 10 (= LINE) of S31.
- Check that the trace is triggered.
- Remove the input signal.

Single sweep

- Release MEMORY OFF S1.
- Depress DC of S5.
- Depress SINGLE S6.
- Set the A AMPL/DIV switch to 0,1 V/div.
- Set the MTB TIME/DIV switch to 50 μs/div.
- Depress A of S31.
- Turn the INTENS control R17 fully clockwise.
- Turn the PERSISTENCE control R11 fully clockwise (not in MAX WRITE).
- Turn the MTB LEVEL control R7 fully anti-clockwise.
- Depress RESET S7.
- Check that the pilot lamp NOT TRIG'D B1 lights up.
- Apply a sine-wave voltage of 480 mV, frequency 2 kHz to the A input socket X2.
- Depress ERASE S8.
- Turn the MTB LEVEL control R7 clockwise so that 1 sweep is written on the screen.
- Check that the pilot lamp NOT TRIG'D B1 is extinguished.

Dual triggering

- Depress MEMORY OFF S1.
- Release SINGLE S6.
- Set the MTB LEVEL control R7/S14 to DUAL.
- Check that a dual signal is visible on the screen; if necessary, adjust the TIME/DIV control R13.
- Remove the input signal.

5.5.9. X-Deflection

Sensitivity

- Set the controls as indicated in Fig. 4.1.
- Set the MTB TIME/DIV switch to X DEFL.
- Depress EXT of S31.
- Apply a sine-wave voltage of 1,6 Vp-p, frequency 2 kHz to the EXT input socket X6.
- Check that the trace length is 8 divisions ± 1 division.
- Remove the input signal.

Bandwidth X-ampl.

- Apply a sine-wave voltage with a frequency of 2 kHz to the EXT input socket X6 and adjust the amplitude of the input voltage so that the trace length is 8 divisions.
- Increase the frequency of the input voltage to 1 MHz.
- Check that the trace length is at least 5,6 divisions.
- Remove the input signal.

X-Deflection with a line signal

- Depress EXT and EXT ÷ 10 (= LINE) of S31.
- Check that the trace length is $\geqslant 8$ divisions.

Horizontal sensitivity via YA

- Depress B of S2.
- Depress A of S31.
- Apply a sine-wave voltage of 120 mVp-p, frequency 2 kHz to the A input socket X2.
- Check that the trace length is 6 divisions ± 0,6 division.
- Remove, the input signal.

Horizontal sensitivity via YB

- Depress A of S2.
- Depress B of S31.
- Apply a sine-wave voltage of 120 mVp-p, frequency 2 kHz to the B input socket X3.
- Check that the trace length is 6 divisions ± 0,6 division.

Phase difference between X and Y channels

- Depress B of S2.
- Check that the line is displayed under an angle of 45° with the horizontal central line.
- Increase the frequency of the input signal to 100 kHz.
- Check that the phase error does not exceed 3° (≤ 2 subdivisions).
- Remove the input signal.

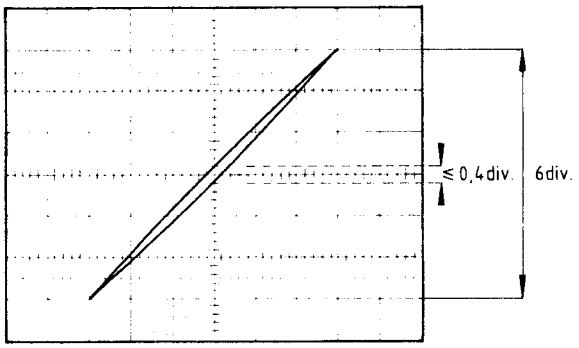

MAT 985

5.5.10. Calibration voltage

- Check that the voltage on the CAL output X1 is a square-wave voltage of 1,2 Vp-p ± 0,7%; if necessary, readjust potentiometer R1561.
- Check that the frequency of the CAL voltage is 2 kHz ± 10 %.

5.5.11. Storage section

Introduction

- It is recommended first to check and adjust the storage measurings in accordance to section 5.5.2.
- Remember to press the ERASE button in the WRITE mode before every adjustment/check.
- Remember to adjust the FOCUS control for the best writing result.

Writing speed

- Set the controls as indicated in Fig. 4.1.
- Release MEMORY OFF S1.
- Depress MTB of S4.
- Depress SINGLE S6.
- Set the A AMPL/DIV switch to 50 mV/div.
- Set the MTB TIME/DIV switch to 1 ms/div.
- Turn the PERSISTENCE control R14 fully clockwise (not in MAX WRITE).
- Apply a sine-wave voltage of 1,6 Vp-p, frequency 2 kHz to the A input socket X2.
- Turn the INTENS control R17 fully clockwise.
- Depress ERASE S8 and check that the screen is written for at least 80 % (i.e. ≥ 64 div.).

Max. write

- Set the MTB TIME/DIV switch to 0,1 ms/div.
- Set the PERSISTENCE control R14/S25 to MAX WRITE.
- Increase the frequency of the input signal to 20 kHz.
- Depress ERASE S8 and check that the screen is writen for at least 80 % (i.e. ≥ 64 div); if necessary, readjust potentiometer R1438.
- Check that after 1 minute the screen is still clearly visible; if necessary, decrease the voltage on G9, i.e. potentiometer R1463.
  (Note: the voltage on G9 must be adjusted between 2,5 V and 3 V.)
- Remove the input signal.

Auto store

- Depress DC of S5.
- Set the A AMPL/DIV switch to 0,1 V/div.
- Set the MTB TIME/DIV switch to 2 ms/div.
- Turn the MTB LEVEL control R7 fully anti-clockwise.
- Release SINGLE S6.
- Apply a sine-wave voltage of 600 mV, frequency 2 kHz to the A input socket X2.
- Depress AUTO STORE S16; check that the screen erases once and that the pilot lamp NOT TRIG'D B1 lights up.
- Set the MTB LEVEL control R7/S14 to DUAL.
- Check that pilot lamp NOT TRIG'D B1 is extinguished and that pilot lamp AUTO STORE B2 lights up.
- Depress ERASE S8 and check that no erase happens.
- Depress S15 to READ.
- Turn the BRIGHTNESS control R1 fully clockwise.
- Check that the stored signal is visible on the screen.
- Turn the BRIGHTNESS control R1 fully anti-clockwise.
- Check that the stored signal is not visible on the screen.
- Release S15 to WRITE.
- Depress RESET S7 and check that pilot lamp NOT TRIG'D B1 lights up.
- Turn the MTB LEVEL control R7 anti-clockwise and check that pilot lamp AUTO STORE B2 lights up.
- Turn the BRIGHTNESS control R1 fully clockwise.
- Depress S15 to READ.
- Check that 2 signals are visible on the screen.
- Release S15 to WRITE.
- Depress ERASE S8 and check that the screen erases.
- Release AUTO STORE S16.
- Remove the input signal.

View time

- Depress AC and DC (= AUTO) of S5.
- Set the B AMPL/DIV switch to 0,1 V/div.
- Set the A and B position controls R2 and R3 in their mid-position.
- Set the DELAY TIME control R4 to 4.00.
- Set the MTB TIME/DIV switch to 1 ms/div.
- Set the DTB TIME/DIV switch to 0,5 ms/div.
- Release S26 to DC.
- Release S28 to DC
- Set the LEVEL control R7 in its mid-position.
- Turn the PERSISTENCE control R14 fully clockwise (not in MAX WRITE).
- Set the INTENS control R17 to 30° from its left-hand stop.
- Apply a sine-wave voltage of 200 mVp-p, frequency 2 kHz to the A input socket X2 and the B input socket X3.
- Pull the PULL FOR AUTO ERASE switch S9.
- Turn the VIEW TIME control R1 fully anti-clockwise.
- Check that the screen erases after every 1 sec.
- Turn the VIEW TIME control R1 fully clockwise.
- Check that the screen erases after every 10 sec.
- Depress ALT of S2.
- Check that after erasing the old signal, 2 signals are visible on the screen.
- Depress DTB and MTB (= ALT TB) of S4.
- Check that after erasing the old 2 signals, 4 signals are visible on the screen.
- Depress DC of S5.
- Turn the LEVEL control R7 fully anti-clockwise and check that no erase takes place.
- Depress and release AUTO STORE S16 and check that the screen erases immediately.
- Depress READ S15 and check that the brightness of the screen is adjustable by means of the BRIGHTNESS control R1.
- Release S15 to WRITE and check that the screen erases immediately.
- Depress and release MEMORY OFF S1 and check that the screen erases immediately.
- Remove the input signal.

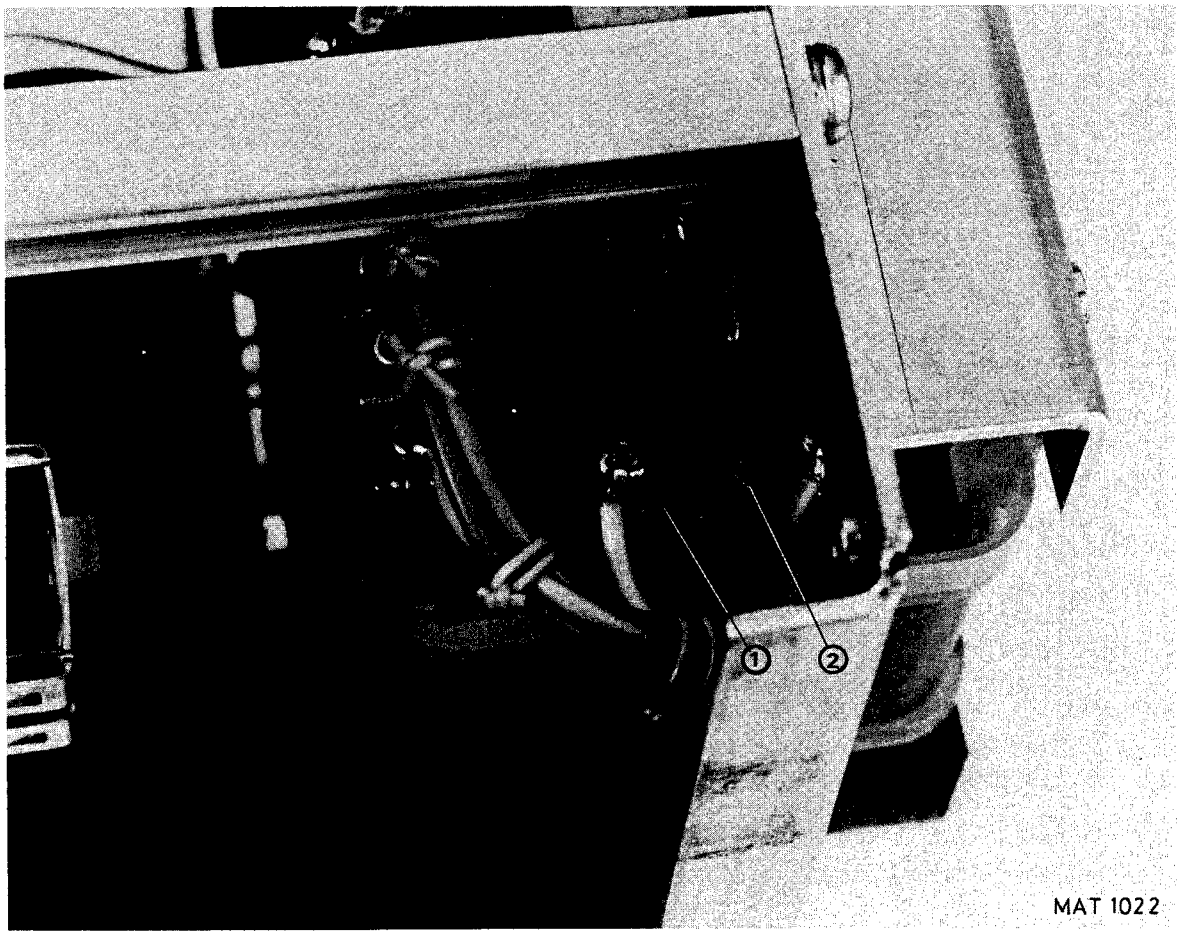

Fig. 6.1.

6. CORRECTIVE MAINTENANCE

6.1. REPLACEMENTS

WARNING: The opening of covers or removal of parts, except those to which access can be gained by hand, is likely to expose live parts, and also accessible terminals may be live.
The instrument shall be disconnected from all voltage sources before any adjustment, replacement or maintenance and repair during which the instrument will be opened.
If afterwards any adjustment, maintenance or repair of the opened instrument under voltage is inevitable, it shall be carried out only by a skilled person who is aware of the hazard involved.
Bear in mind that capacitors inside the instrument may still be charged even if the instrument has been separated from all voltage sources.

Standard parts

Electrical and mechanical replacement parts can be obtained through your local Philips organisation or representative. However, many of the standard electronic components can be obtained from other local suppliers.
Before purchasing or ordering replacement parts, check the parts list for value tolerance, rating and description.

Note: Physical size and shape of a component may affect instrument performance, particularly at high frequencies. Always use direct-replacement components, unless it is known that a substitute will not degrade instrument performance.

Special parts

In addition to the standard electronic components, some special components are used.
These components are manufactured or selected by Philips to meet specific performance requirements.

Transistors and integrated circuits

Transistors and I.C.'s (integrated circuits) should not be replaced unless they are actually defective. If removed from their sockets during routine maintenance return them to their original sockets. Unnecessary replacement or switching of semiconductor devices may affect the calibration of the instrument. When a transistor is replaced, check the operation of the part of the instrument that may be affected.

WARNING: Handle silicone grease with care. Avoid getting silicone grease in the eyes. Wash hands thoroughly after use.

Any replacement component should be of the original type or a direct replacement. Bend the leads to fit the socket and cut the leads to the same length as on the component being replaced.

6.1.1. Replacing internal fuses

- Remove the rear cover and instrument cover as described in chapter 3.2.
- Now three fuses are accessible:
  Thermal fuse of the transformer
  Fuse F1602 of external battery supply protection.
  Fuse F1603 of power supply protection.

6.1.1.1. Thermal fuse replacement (Fig. 6.1)

- Unsolder the fuse connection wires 1 and 2, situated underneath the protection paper (paper not shown on the figure).
- Pull out the fuse.
- Insert a new fuse and solder the connection wire.

6.1.1.2. Fuse F1602 and F1603 (Fig. 6.2.)

These fuses can be replaced after disconnecting the shown connector.

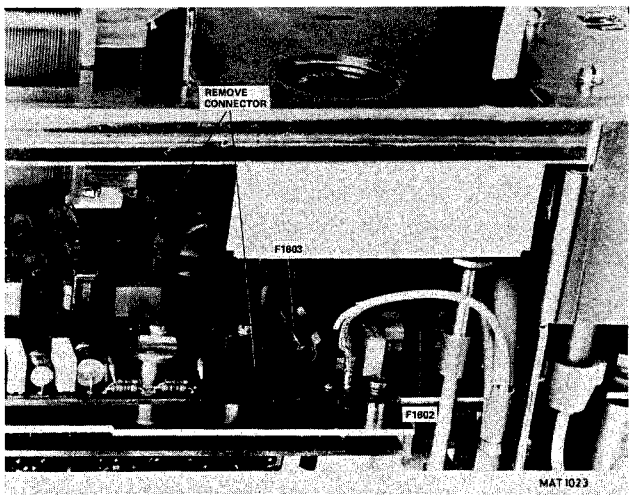

Fig. 6.2.

6.1.2. Replacing single knobs

- Prise off cap A.
- Slacken screw (or nut) B.
- Pull the knob from the spindle.

When fitting a knob or cap, ensure that the spindle is in a position which allows reference lines to be coincident with the markings on the text plate of the oscilloscope.

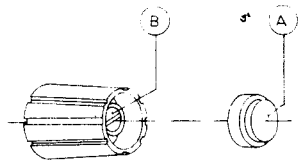

Fig. 6.3.

6.1.3. Replacing double knobs

- Prise off cap A and slacken screw B.
- Pull the inner knob from the spindle.
- Slacken nut C and pull the outer knob from the spindle.

When fitting a knob or cap, ensure that the spindle is in a position which allows reference lines to be coincident with the markings on the text plate of the oscilloscope.

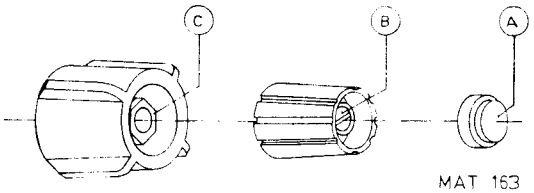

Fig. 6.4.

6.1.4. Replacing the delay-time multiplier knob

- Slacken screw A using an Allen-key and pull the knob of the spindle.
- Remove the nut B and withdraw the ring from the spindle.
- When fitting this control, turn the spindle of the potentiometer fully anticlockwise. Place the ring on the spindle so that the reference line corresponds to the zero mark on the calibrated scale. Then lock it with nut B. Fit the inner knob so that its cam is engaged with the slot in the ring. Rotate the inner knob until its zero mark coincides with the reference line on the ring. Secure the assembly by tightening screw A.

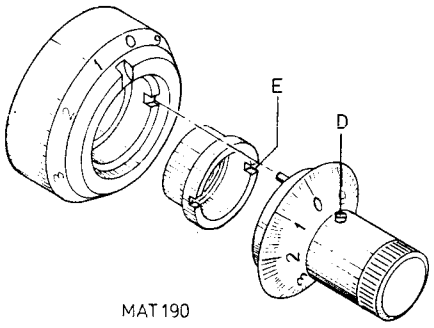

Fig. 6.5.

6.1.5. Removing of the textplate

- After having removed all knobs the text plate can be removed by loosening the four hexagonal nuts of the AMPL – and TIME/DIV switches.

6.1.6. Removing the front assembly

In order to gain access to parts on the AMPL/DIV switches, to replace trimmer capacitors or other components on the attenuator board, it is best to remove the front panel assembly as a whole in accordance with the following procedure:

- Remove the instrument covers in accordance with section 3.
- Remove the INTENS, FOCUS and ILLUM knobs by pulling them off the shaft.
- Remove the two screws C (Fig. 6.6).
- Remove the four screws D that secure the pushbutton switches to the front panel (Fig. 6.6.).
- Remove the two screws F that hold the attenuator to the frame bar (Fig. 6.8.).
- Remove the three screws E (Fig. 6.7.).
- Make a note of the positions of the miniature socket connections on the amplifier board.
- Remove all plugs, miniature sockets, coaxial sockets and clamping terminals from the unit and the amplifier board.
- Remove the complete front assembly from the instrument: screening covers can then be removed to gain access to and remove parts.
- When the front panel assembly is reinstalled, make sure not to interchange the connections of the Y position controls. The connections are correct when the trace shifts upwards if the Y position control is rotated clockwise.

6.1.7. Replacing the cathode ray tube

- Remove the rear cover and instrument cover as described in chapter 3.2.
- Remove the bezel and contrast plate.
- Unscrew 4 screws A fig. 6.9.
- Remove the upper CRT shield.
- Disconnect all tube connections and mark the colour code.
- Disconnect the EHT connections fig. 6.10.
- Disconnect the trace rotation cable fig. 6.11.
- Disconnect the CRT socket.
- Loosen 2 screws B fig. 6.11.
- Loosen 4 screws C fig. 6.12.

ATTENTION: Do not touch the other screws.

- Withdraw the CRT through the front and do not damage the connectors and cables.
- Install the new CRT in reverse order with respect to the following.
- Fix slightly screws C after the CRT is placed and place the contrast filter and bezel.
- Press the CRT lightly against the contrast filter and tighten screws B 1 and B2.
- Remove the bezel again and tighten screws C taking care that the fixing plates are pressed tightly against the CRT front.

ATTENTION: Do not use magnetic tools.

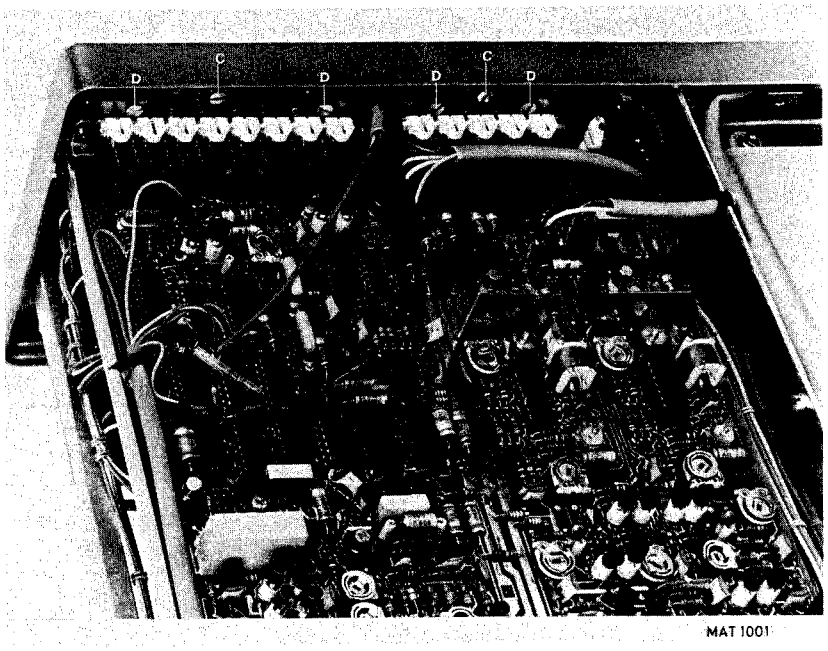

Fig. 6.6.

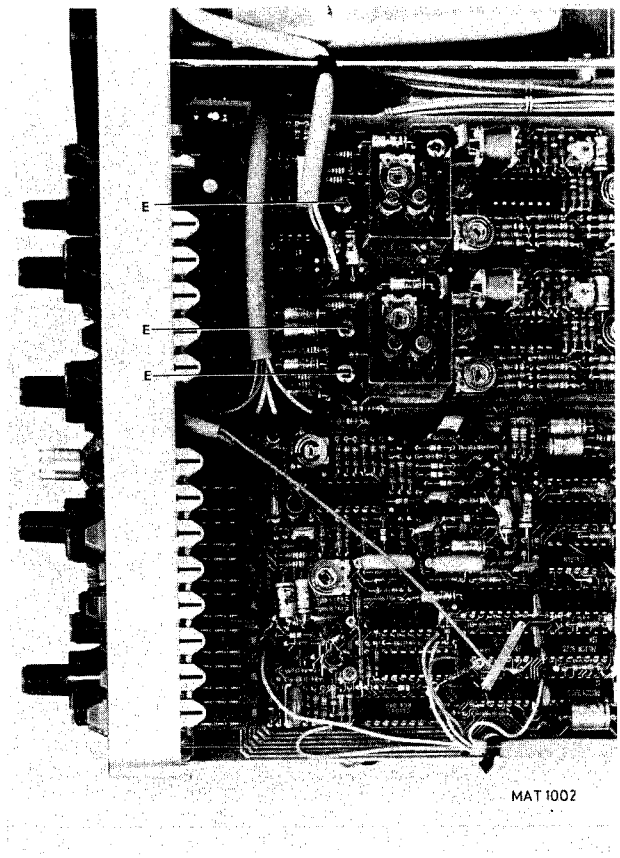

Fig. 6.7.

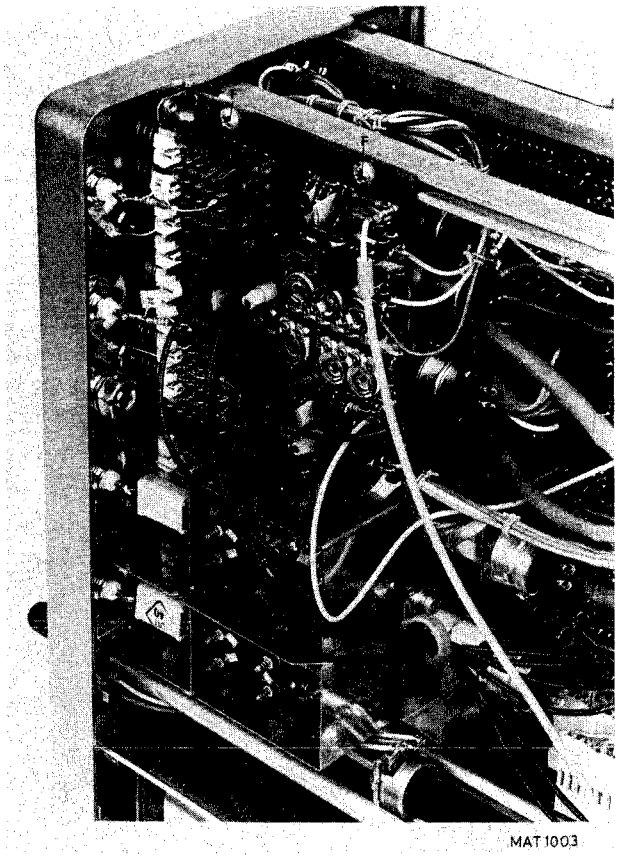

Fig. 6.8.

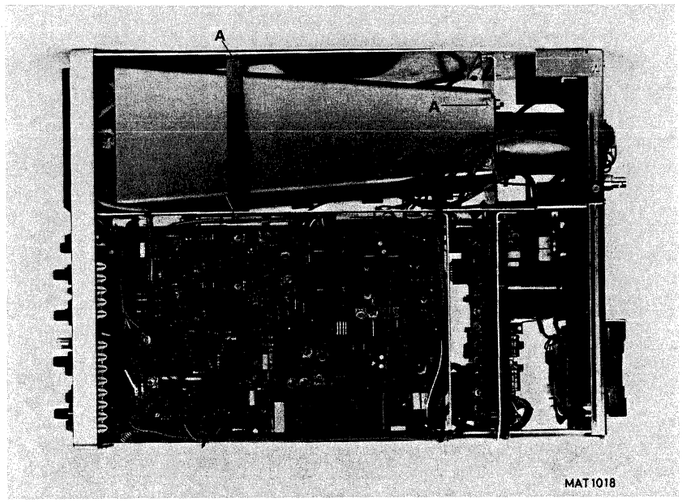

Fig. 6.9.

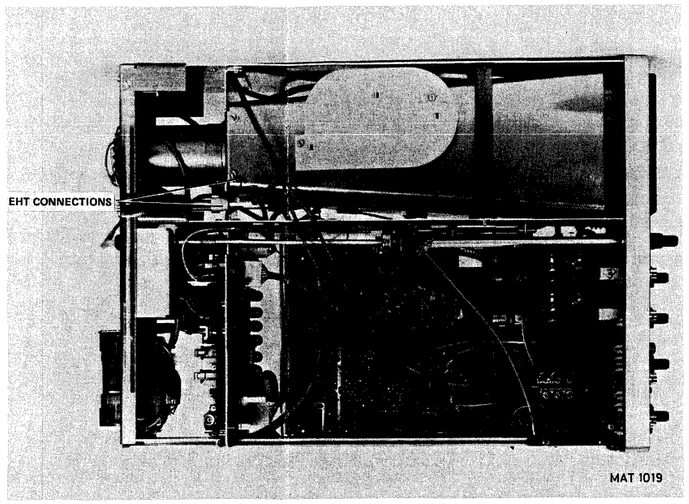

Fig. 6.10.

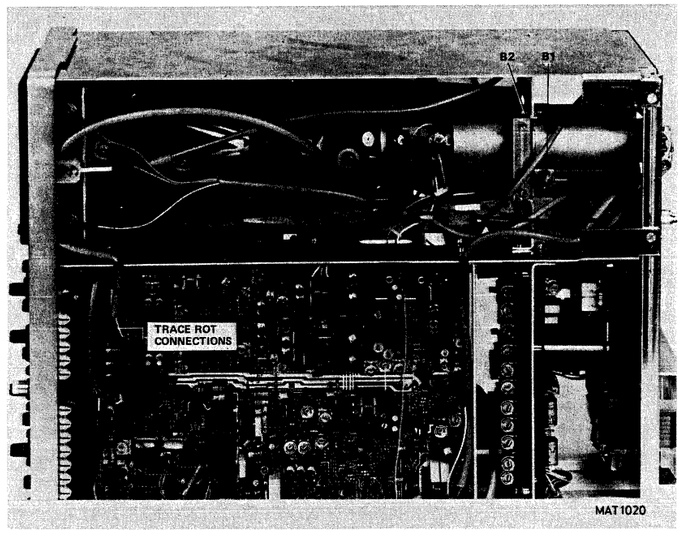

Fig. 6.11.

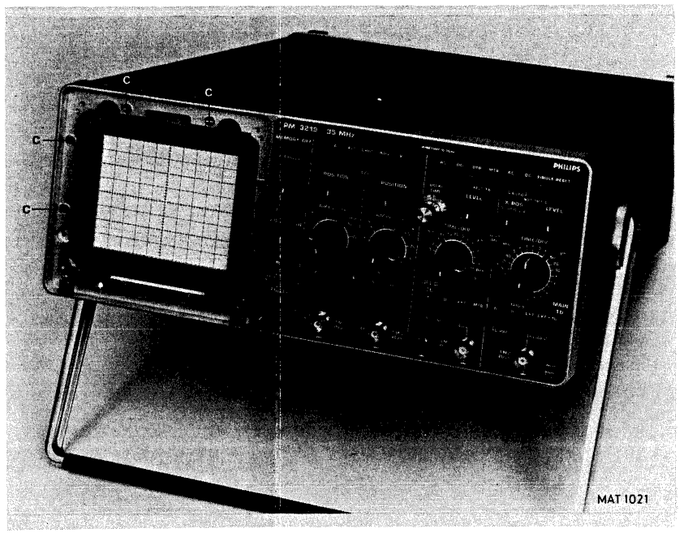

Fig. 6.12.

6.2. SOLDERING TECHNIQUES

Working method:

- Carefully unsolder one after the other the soldering tags of the semi-conductor.
- Remove all superfluous soldering material. Use a sucking iron or sucking copper litze wire.
- Check that the tags of the replacement part are clean and pre-tinned on the soldering places.
- Locate the replacement semi-conductor exactly on its place, and solder each tag to the relevant printed conductor on the circuit board.

Note: Bear in mind that the maximum permissible soldering time is 10 seconds during which the temperature of the tags must not exceed 250 deg. C. The use of a solder with a low melting point is therefore recommended.

Take care not damage the plastic encapsulation of the semi-conductor.

ATTENTION: When you are soldering inside the instrument it is essential to use a low-voltage soldering iron, the tip of which must be earthed to the mass of the oscilloscope.

Suitable soldering irons are:

- ORYX micro-miniature soldering instrument, type 6A, voltage 6 V, in combination with PLATO pin-point tip type 0-569.
- ERSA miniature soldering iron, type minot 040 B, voltage 6 V.
- Low Voltage Mini Soldering Iron, Type 800/12 W - 6 V, power 12 W, voltage 6 V, order no. 4822 395 10004, in combination with 1 mm-pin-point tip, order no. 4822 395 10012.

Ordinary 60/40 solder and 35- to 40-watt pencil-type soldering iron can be used to accomplish the majority of the soldering. If a higher wattage-rating soldering iron is used on the etched circuit boards, excessive heat can cause the etched circuit wiring to separate from the board base material.

6.3. Trouble-shooting hints

If a fault appears, the following test sequence can be used to find the defective circuit part:

- Check if the settings of the controls of the oscilloscope are correct. Consult the operating instructions .
- Check the equipment to which the oscilloscope is connected and the interconnection cables.
- Check if the oscilloscope is well-calibrated. If not refer to section 5 (checking and adjusting).
- Visually check the part of the oscilloscope in which the fault is suspected. In this way, it is possible to find faults such as bad soldering connections, bad interconnection plugs and wires, damaged components or transistors and IC's that are not correctly plugged into their sockets.
- Location of the circuit part in which the fault is suspected: the symptom often indicates this part of the circuit. If the power supply is defective the symptom will appear in several circuit parts.

After having carried out the previous steps, individual components in the suspected circuit parts must be examined:

- Transistors and diodes. Check the voltage between base and emitter (0,7 Volt approx. in conductive state) and the voltage between collector and emitter (0,2 Volt approx. in saturation) with a voltmeter or oscilloscope. When removed from the p.c.b. it is possible to test the transistor with an ohmmeter since the base/emitter and base/collector junctions can be regarded as diodes. Like a normal diode, the resistance is very high in one direction and low in the other direction. When measuring take care that the current from the ohmmeter does not damage the component under test.
  Replace the suspected component by a new one if you are sure that the circuit is not in such a condition that the new one will be damaged.
- Integrated circuits. In circuit testing can be done with an oscilloscope or voltmeter. A good knowledge of the circuit part under test is essential. Therefore first read the circuit description in section 2.
- Capacitors. Leakage can be traced with an ohmmeter adjusted to the highest resistance range. When testing take care of polarity and maximum allowed voltage. An open capacitor can be checked if the response for AC-signals is observed. Also a capacitance meter can be used: compare the measured value with value and tolerance indicated in the parts list.
- Resistors. Can be checked with an ohmmeter after having unsoldered one side of the resistor from the p.c.b. Compare the measured value with value and tolerance indicated in the parts list.
- Coils and transformers. An ohmmeter can be used for tracing an open circuit. Shorted or partially shorted windings can be found by checking the wave-form response when HF signals are passed through the circuit. Also an inductance meter can be used.

Note: *If a component must be replaced always use a direct-replacement. If not available use and equivalent after carefully checking that it does not degrade the instrument's performance.*
After replacement of a component the calibration of the instrument may be affected due to component tolerances. If necessary do the required adjustements.

6.4. COMPONENT LOCATION

To simplify the tracing of components in the instrument a component location list of the amplifier and the storage unit is given in chapter 6.4.1. and 6.4.2.
More over the component number indicates the location:

1..	Attenuator channel A.
2..	Attenuator channel B.
3..	Preamplifier channel A.
4..	Preamplifier channel B.
5..	Channel switch.
6..	Delay line + final Y-amplifier.
7..	Trigger selection MTB.
8..	Trigger selection DTB.
9..	MTB.
10..	DTB.
11..	Electronic switch.
12..	Final X-amplifier.
13.. + 14..	Storage.
15..	Z-amplifier.
16.. + 17..	Power supply.

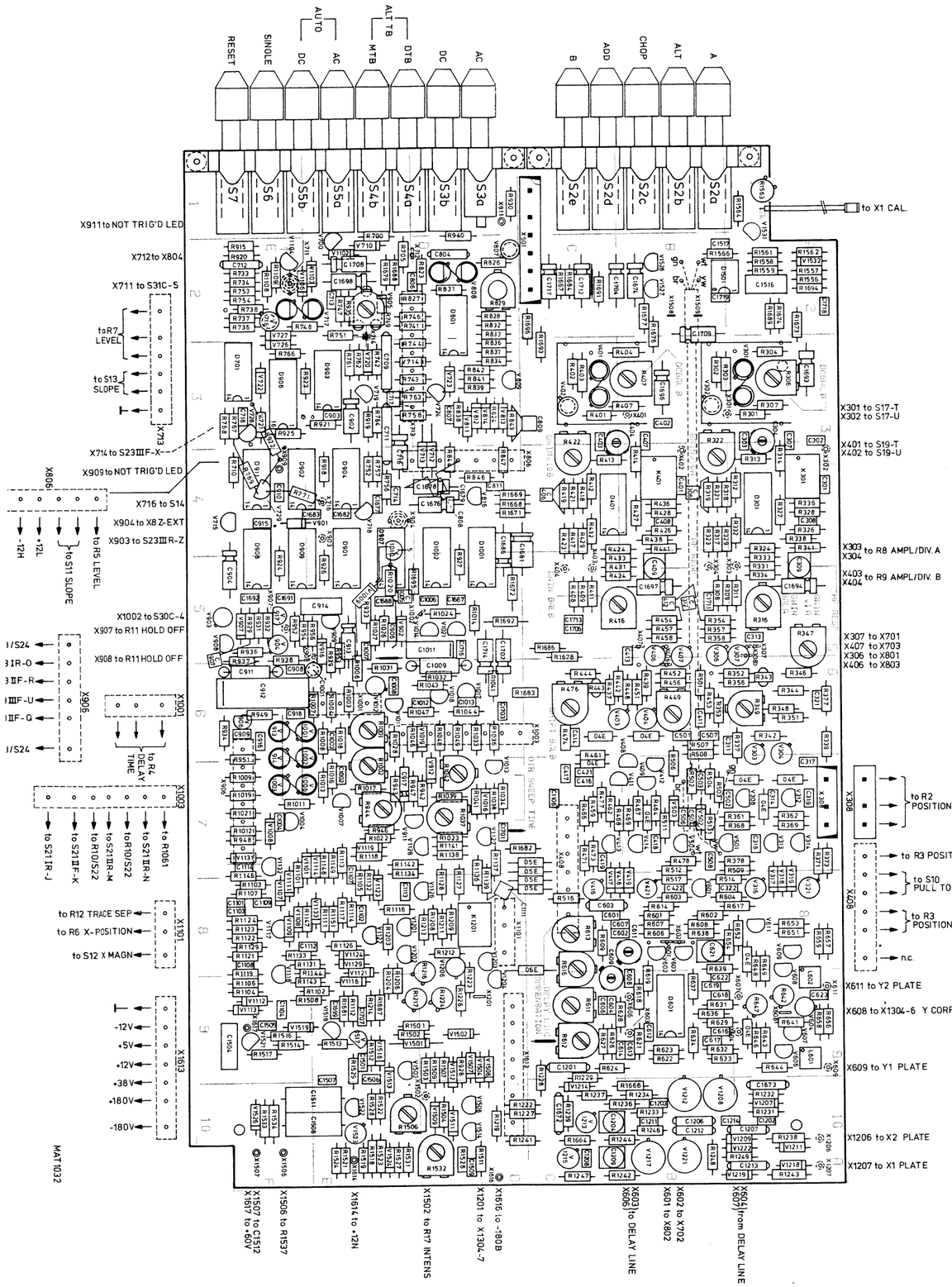

Component location amplfier unit.

6.4.1. Component location list amplifier unit.

C301	A4	C606	C9	C1001	E6	C1516	A2	D301	A4
C302	A3-4	C607	B-C8	C1002	E7	C1517	B2	D401	C4
C303	A3-4	C608	B9	C1003	E6	C1518	A2	D601	B9
C304	A3-4	C609	C9	C1004	F7	C1519	A1-2	D701	F3
				C1005	E5			D801	D2-3
C306	B4	C611	B8	C1006	D5	C1672	C10		
C307	A3-4	C612	B9	C1007	E5	C1673	A10	D901	E4-5
C308	A4	C613	B9	C1008	E6	C1674	B2	D902	E-F4
C309	A4-5	C614	B-C9	C1009	D6			D903	E3
						C1676	D4	D904	E4
C311	B6	C616	B9	C1011	D5	C1677	E4		
C312	B5	C617	B9	C1012	D6	C1678	D4	D906	E3
C313	A5	C618	B9	C1013	D6	C1679	D4	D907	E4-5
C314	A7	C619	B9					D908	F4-5
				C1101	F8	C1681	C4-5	D909	E-F4-5
C317	A7	C621	B8	C1102	E8	C1682	E4		
C318	A7	C622	B9	C1103	F8	C1683	E4	D911	F4
C319	A7	C623	A9	C1104	F9	C1684			
								D1001	D4-5
C321	A6	C709	E3	C1106	C7	C1686	D4-5	D1002	D4-5
C322	A-B8			C1107	E7-8	C1687	D5		
		C711	E3	C1108	F8	C1688	E5		
C401	B4	C712	F2	C1109	F8	C1689		D1501	A-B2
C402	B3	C713	E2						
C403	C3-4	C714	E4	C1111	D8				
C404	B-C3-4			C1112	E-F8	C1691	F5		
		C716	E4	C1113	E8	C1692	F5		
C406	C4	C717	D3	C1114	F7	C1693	A3		
C407	B3-4	C718	F3			C1694	A5		
C408	B4			C1201	C9	C1695			
C409	B4-5	C804	D2	C1202	A10	C1696	B3		
				C1202	A10	C1697	B5		
C411	B6	C806	D2	C1203	B10	C1698	E2		
C412	B5	C807	D3	C1204	C10	C1699	E9		
C413	B5-6	C808	D4						
C414	C6	C809	C-D3	C1206	B10	C1701	D7		
				C1207	A10	C1702	D5		
C416	C7	C811	D4	C1208	C10	C1703	D6		
C417	C7			C1209	C10	C1704	B-C2		
C418	B7	C901	E3						
C419	C7	C902	E3	C1211	B10	C1706	C5		
		C903	E3	C1212	B10	C1707	E9		
C421	C7	C904	F5	C1213	A10	C1708	E2		
C422	B8			C1214	A-B10	C1709	B2-3		
		C905	E3						
		C906	E5	C1501	E9	C1711	B5		
C501	B6	C907	F5	C1502	E9	C1712	C2		
C502	A-B7	C908	F6	C1503	E-F9	C1713	C5		
C503	B7	C909	F6	C1504	F9	C1714	D5		
C504	B7	C910	F4	C1505		C1715	D5		
		C911	F6	C1506	E9-10	C1716	D5		
C506	B7	C912	F6	C1507	E9-10	C1717	C2		
C507	B6	C913	E5	C1508	E-F10	C1718	A2		
C508	B7-8	C914	E5	C1509	D10	C1719	B2		
C601	C8	C916	F6	C1511	E-F11				
C602	B-C8	C917	E6						
C603	C8	C918	F6						
C604	C4								

R301	A3	R351	A6	R451	B-C5	R506	B7	R641	A9
R302	B3	R352	A6	R432	C4	R507	B6	R642	A9
R303	B3	R353	B6	R433	B-C5	R508	B6-7	R643	A9
R304	A3	R354	B5	R434	B-C5	R509	A7-8	R644	A9
R306	A3	R356	A6	R436	B4	R511	B7	R646	A9
R307	A3	R357	B5	R437	C6	R512	B78	R647	A9
R308	B5	R358	B5	R438	B4	R513	B7	R648	A8-9
R309	A-B5			R439	B6	R514	A-B8	R619	A8-9
		R361	A7						
R311	A5	R362	A7	R441	B4-5	R516	C8	R651	A8
R312	A4			R442	B-C6	R517	B8	R652	A8
R313	A4	R368	A7	R443	C6			R653	A8
R314	A4	R369	A7	R444	C6	R601	B8	R654	A-B8
						R602	B8		
R316	A5	R371	A7	R448	B6	R603	B8	R656	A9
R317	B4	R373	A7	R449	B6	R604	A-B8	R657	A8
R318	B4							R658	A9
R319	B4	R377	A6	R451	B6	R606	B8	R659	A8
		R378	A7	R452	B6	R607	B8		
R321	B4			R453	B6	R608	B8	R700	E2
R322	B4	R401	C3	R454	B5	R609	C8	R705	E2
R323	B4	R402	C3					R710	F4
R324	A4-5	R403	C3	R456	B6	R611	C9	R715	F4
		R404	B3	R457	B5	R612	C9	R733	F2
R326	A4			R458	B5	R613	C8	R734	F2
R327	A4	R406	B3	R459	C7	R614	B8		
R328	A4	R407	B3					R736	F2
R329	B4	R408	C5	R461	C6-7	R616	C8-9	R737	F2
		R409	C5	R462	C7	R617	A8	R738	F2
R331	A5					R618	B9		
R332	A4	R411	C5	R464	B7	R619	B9	R741	D-E2
R333	A4	R412	C4					R742	E3
R334	A5	R413	C4	R466	C7			R743	D-E3
		R414	B4	R467	B7	R621	B9	R744	D-E3
R336	A4			R468	B-C7	R622	B9		
R337	A6	R416	B-C5	R469	B7	R623	B9		
R338	A4	R417	C4			R624	C9	R746	D-E2
R339	A6	R418	C4	R471	C7			R747	E2
		R419	C4	R473	C7	R626	C9	R748	E-F2
R341	A4-5			R474	C6	R627	C9	R749	E2
R342	A6	R421	C4			R628	B-C9		
R343	A6	R422	C4	R476	C6	R629	B9	R751	E2
R344	A6	R423	C4	R477	C7	R631	B9	R752	E4
		R424	B-C4-5	R478	B7	R632	B9	R753	F2
R346	A6					R633	B9	R754	F2
R347	A5	R426	B4	R501	B6	R634	B9		
R348	A6	R427	B4	R502	B7			R756	E4
R349	A6	R428	B4	R503	B7	R636	B9	R757	E4
		R429	C4	R504	B7	R637	B9	R758	D-E3
						R638	B8	R759	E5
						R639	B8-9		

R761	E3	R931	F5	R1021	F7	R1121	F8	R1221	C10
R762	E3	R932	F5	R1022	E7	R1122	F8	R1222	C10
R763	D-E3	R933	E5	R1023	D7	R1123	F8	R1223	D9
R764	E3	R934	F6	R1024	D5	R1124	F8	R1224	D9
		R935	E2						
R766	F3	R936	F5	R1026	E5	R1126	E8	R1226	D9
R767	F3	R937	F5-6	R1027	E5	R1127	D8	R1227	C10
R768	F3	R938	F5-6	R1028	E6	R1128	D8	R1228	C9-10
R769	F4	R939	E5-6			R1129	F8	R1229	C9-10
		R940	D2	R1031	E6				
R771	E-F4			R1032	D6	R1131	E-F8	R1231	A10
		R942	D7	R1033	D6	R1132	E8	R1232	A10
R823	D2	R943	E7	R1034	D7	R1133	F8	R1233	B10
R824	D3	R944	E7			R1134	E7-8	R1234	B10
				R1036	D6				
R826	D2	R946	E7	R1037	D7	R1136	D7-8	R1236	B-C10
R827	D-E2	R947	D-E7	R1038	D7	R1137	D7	R1237	C10
R828	D2	R948	F7	R1034	D7	R1138	D7	R1238	A10
R829	D2	R949	F6			R1139	D8	R1239	C10
				R1041	D7				
R831	D2	R951	F6-7	R1042	D7	R1141	D7	R1241	C-D10
R832	D2	R952	F5	R1043	D6	R1142	E7	R1242	B-C10
R833	D2	R953	E5-6	R1044	D6	R1143	E-F9	R1243	A10
R834	D3	R954	F5			R1144	E-F9	R1244	B-C10
				R1046	D-E6				
R836	D3	R956	E5	R1047	D6	R1146	F7-8	R1246	B10
R837	D3			R1048	D6	R1147	E-F8	R1247	C10
R838	D3	R1001	E6	R1049	D6	R1148	E7	R1248	B10
R839	D3	R1002	E7			R1144	E7	R1244	A10
		R1003	E6	R1051	D6				
R841	D3	R1004	E6			R1151	E8	R1501	D-E9
R842	D3			R1101	F7-8			R1502	D-E9
R843	D3	R1006	E6	R1102	E9	R1203	E8	R1503	D9
R844	D4	R1007	E6	R1103	F8	R1204	E9	R1504	D10
		R1008	E6	R1104	F9				
R846	D4	R1009	F7	R1105	E8	R1206	E9	R1506	E10
R847	D4			R1106	F9	R1208	D8	R1507	D9
		R1011	F7	R1107	F8	R1209	D8	R1508	E-F9
R915	F2	R1012	F7	R1108	F2			R1509	D9
R918	E4	R1013	E7	R1109	F2	R1211	D8		
R919	E3	R1014	D5			R1212	D8	R1511	D10
				R1111	E8	R1213	D8	R1512	E9
R920	F2	R1016	E7	R1112	E9	R1214	E9	R1513	E9
R921	E3	R1017	E7	R1113	E7			R1514	F9
R922	F3-4	R1018	E6	R1114	E8	R1216	D8-9		
R923	E-F3	R1019	F7			R1217	D-E9	R1516	F9
R924	F5	R1020	E5	R1116	E8	R1218	D9-10	R1517	F9
R925				R1117	E8	R1219	D10	R1518	E10
R926	E5			R1118	E7			R1519	E10
R927	D5			R1119	F8-9				
R928	D9								
R929	F5								

R1521	E10
R1522	E10
R1523	E10
R1524	E10
R1526	D10
R1527	E10
R1528	E10
R1529	E9
R1531	E10
R1532	C10
R1533	F10
R1534	F10
R1556	A2
R1557	A2
R1558	A2
R1559	A2
R1561	A1
R1562	A1-2
R1563	A1
R1564	A1-2
R1566	A-B2
R1664	C10
R1666	B10
R1667	C2
R1668	D4
R1669	D4
R1671	D4
R1672	D5
R1673	A2
R1674	A2
R1676	B2-3
R1677	B2
R1678	C5-6
R1679	E2
R1681	E9
R1682	C-D7
R1683	C-D6
R1684	C2
R1686	C5
R1687	E9
R1688	E2
R1689	A2

R1691	B2
R1692	D5
R1693	C2-3
R1694	A2
R1695	
R1696	C2
V301	A3
V302	B3
V303	A6
V304	A6
V306	B5-6
V307	A5-6
V308	A7
V312	A7
V313	A7
V314	A7
V316	A8
V317	A8
V318	A8
V319	A8
V321	A8
V401	C3
V402	C3
V403	B-C6
V404	B6
V408	B7
V409	B7
V411	B-C7
V412	B7
V413	C7
V414	B7
V416	C8
V417	C8
V418	B-C8
V419	B8
V421	B8
V501	B7
V502	B7
V503	B7
V504	B7

V601	B8
V602	B8
V603	B8
V604	A9
V606	A9
V607	A9
V608	A8-9
V609	A8
V611	A8
V705	E2
V710	E2
V712	D4
V713	D4
V714	D-E3
V715	F4
V716	F2
V717	E-F2
V718	E4
V719	E3
V721	F3
V722	F3
V723	D3
V724	D3
V726	F3
V727	F3
V728	F3
V807	D2
V808	D2
V809	D3
V811	D3
V812	D3
V813	D3
V814	D3
V816	D4
V901	F4
V902	E5
V903	F5
F904	F5
F905	E2
F906	F6
V907	F5
V908	F5
V909	E5

V911	D-E7
V912	D7
V913	F6
V914	F6-7
V916	E5
V917	F5
V1001	E-F6
V1002	E6-F7
V1003	F7
V1004	F7
V1006	E-F7
V1007	E7
V1008	F7
V1009	E5
V1011	E6
V1012	E6
V1013	D7
V1014	D5
V1016	D7
V1017	D6
V1018	D6
V1019	D6
V1021	D5
V1101	F7-8
V1102	E2
V1103	E2
V1104	F2
V1106	E-F2
V1107	F8
V1108	F8
V1109	F8
V1111	F8
V1112	F9
V1113	F9
V1114	E7
V1116	E9
V1117	F8
V1118	F8-9
V1119	E7
V1121	E8-9
V1122	E8
V1123	E8
V1124	E8
V1126	D8
V1127	D7
V1128	D7
V1129	E8

V1131	F7
V1132	F7
V1133	E8
V1201	C8
V1202	C8
V1203	D8
V1204	D9
V1206	D8
V1207	A10
V1208	B10
V1209	A10
V1211	A10
V1212	B10
V1213	C10
V1214	C10
V1216	C10
V1217	B10
V1218	A10
V1219	
V1221	B10
V1222	A10
V1501	D-E9
V1502	D9
V1503	E9
V1504	D9
V1506	D9
V1507	D9
V1508	D10
V1509	D10
V1511	D10
V1512	D9-10
V1513	E9-10
V1514	D10
V1516	E9
V1517	E9
V1518	E9
V1519	F9
V1521	F9
V1522	E10
V1523	E10
V1524	E10
V1526	F10
V1527	B2
V1528	B2
V1531	A2
V1532	A2

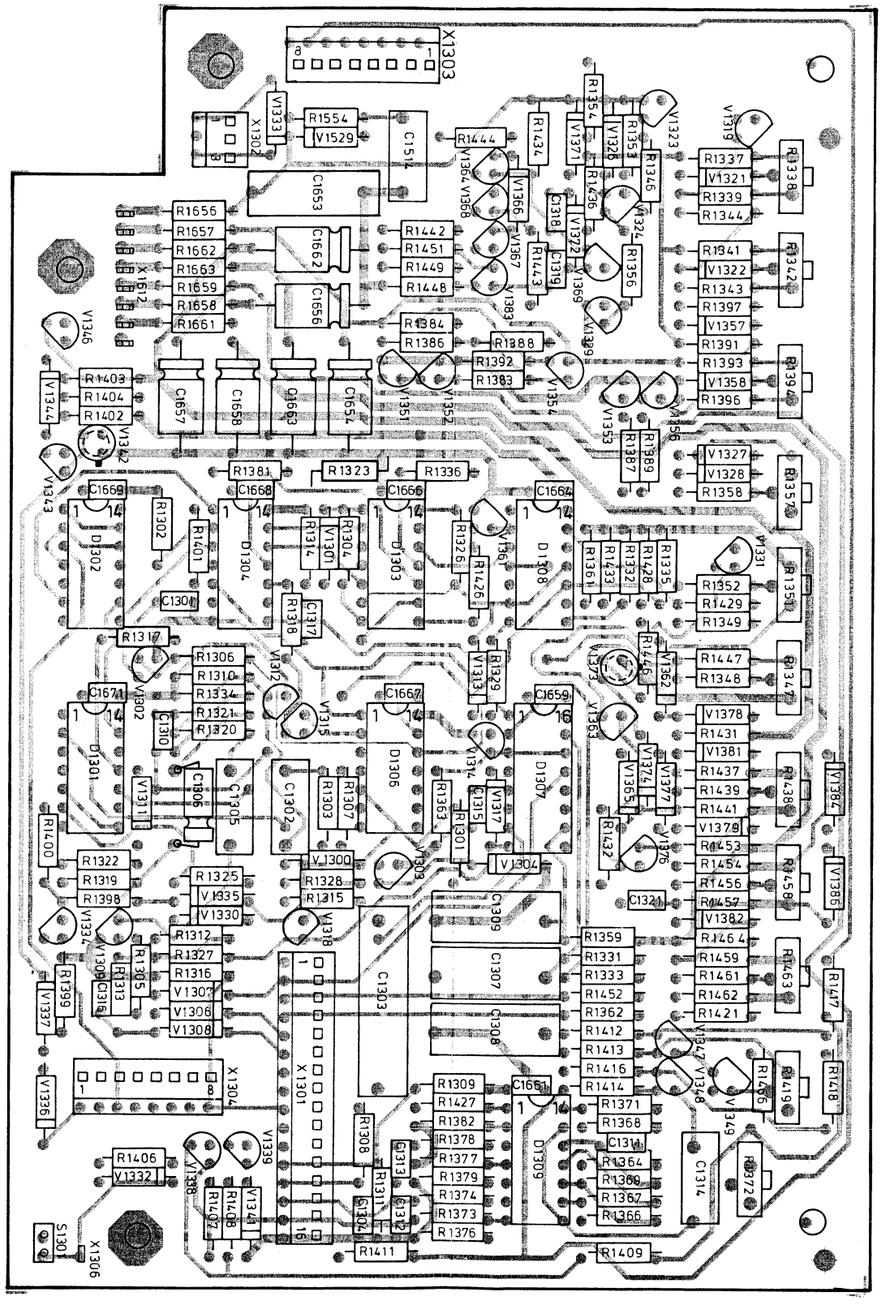
X1303
X1302
V1333
R1554
V1529
C1514
C1653
R1444
R1434
R1656
R1657
R1662
R1663
R1659
R1658
R1661
C1662
C1656
X1612
V1346
R1442
R1451
R1449
R1448
R1384
R1386
R1388
R1392
R1383
R1403
R1404
R1402
C1657
C1658
C1655
C1654
V1344
V1342
V1343
R1381
R1323
R1336
C1668
C1666
C1664
R1302
R1401
D1302
D1304
D1303
D1308
R1314
V1301
R1304
R1326
R1426
R1428
R1332
R1335
R1433
R1364
C1305
R1318
R1317
V1332
V1315
V1313
R1329
C1667
C1659
V1363
V1362
R1446
V1373
V1374
V1377
V1365
R1432
V1376
V1375
V1379
V1380
V1381
V1382
V1383
V1384
V1385
V1386
V1387
V1388
V1389
V1390
V1391
V1392
V1393
V1394
V1395
V1396
V1397
V1398
V1399
V1400
V1401
V1402
V1403
V1404
V1405
V1406
V1407
V1408
V1409
V1410
V1411
V1412
V1413
V1414
V1415
V1416
V1417
V1418

V1300	I14	V1347	G15
V1301	I13	V1348	G15
V1302	J13	V1349	G15
V1303	I14	V1351	I12
V1304	H14	V1352	I12
V1306	J15	V1353	H12
V1307	J15	V1354	H12
V1308	J15	V1356	H12
V1309	J15	V1357	G12
V1311	J14	V1358	G!2
V1312	I14	V1361	H13
V1313	H13-14	V1362	G-H13
V1314	H14	V1363	H14
V1315	I14	V1364	H11
V1317	H14	V1365	H14
V1318	I15	V1366	H11
V1319	G11	V1367	H12
V1321	G11	V1368	H11-12
V1322	G12	V1369	H12
V1323	H11	V1371	H11
V1324	H11-12	V1372	H12
V1326	H11	V1373	H13
V1327	G13	V1374	H14
V1328	G13	V1376	H14
V1329	H12	V1377	G-H14
V1330	I-J15	V1378	G14
V1331	G13	V1379	G14
V1332	J16	V1381	G14
V1333	I11	V1382	G15
V1334	J15	V1383	H12
V1335	I-J14	V1384	G14
V1336	J15-16	V1386	G14
V1337	J15	V1529	I11
V1338	J16		
V1339	I16		
V1341	I16		
V1342	J13		
V1343	J13		
V1344	J12		
V1346	J12		

6.5. RECALIBRATION AFTER REPAIR

After any electrical component has been replaced the calibration of that particular circuit should be checked, as well as the calibration of other closely related circuit.
Since the power supply affects all circuits, calibration of the entire instrument should be checked if work has been done in the power supply or if the transformer has been replaced.

6.6. INSTRUMENT REPACKAGING

If the instrument is to be shipped to a Service Centre for service or repair, attach a tag showing owner (with address) and the name of an individual at your firm that can be contacted. The Service Centre needs the complete instrument serial number and a fault description.

Save and re-use the packing in which your instrument was shipped. If the original packing is unfit for use or not available, repack the instrument in such a way that no damage during transport occurs.

7. PARTS LIST

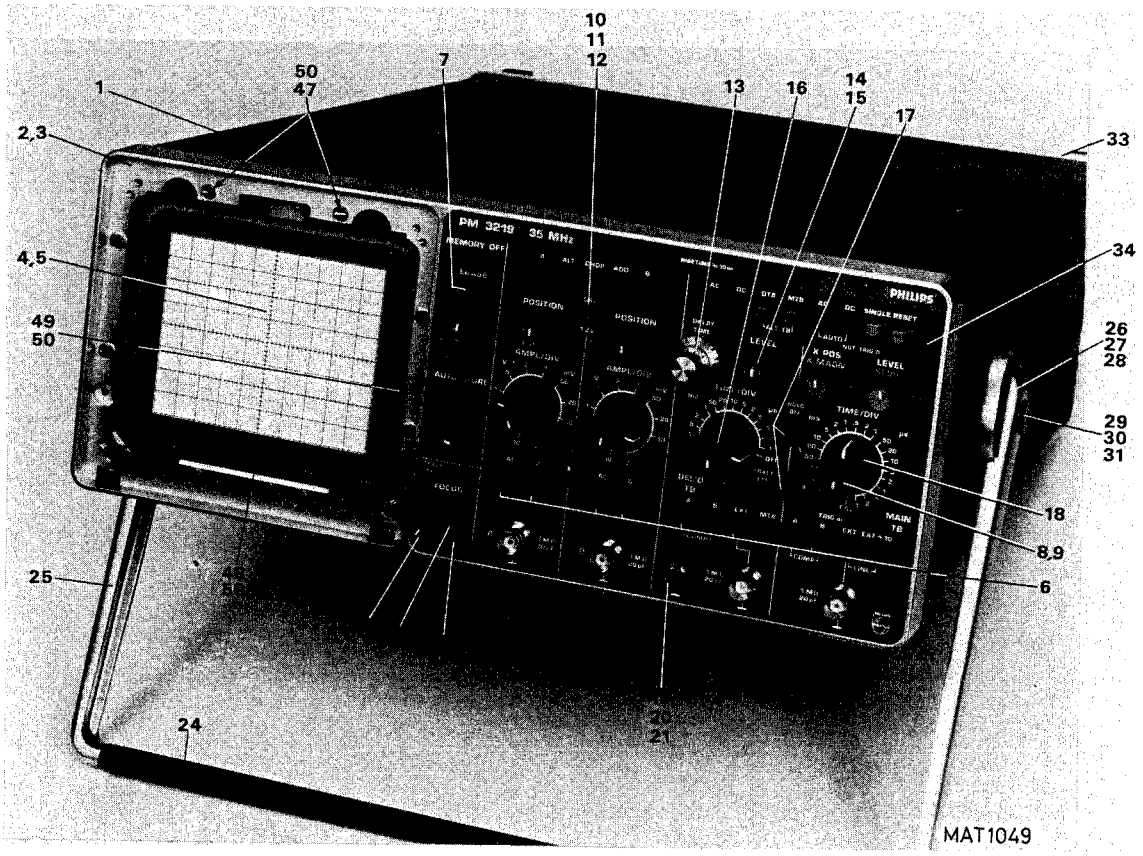
10
11
12
50
47
7
1
13
16
14
15
17
33
2,3
4,5
34
49
50
26
27
28
29
30
31
18
8,9
6
25
24
20
21
PM 3219 35 MHz
PHILIPS
MAT1049

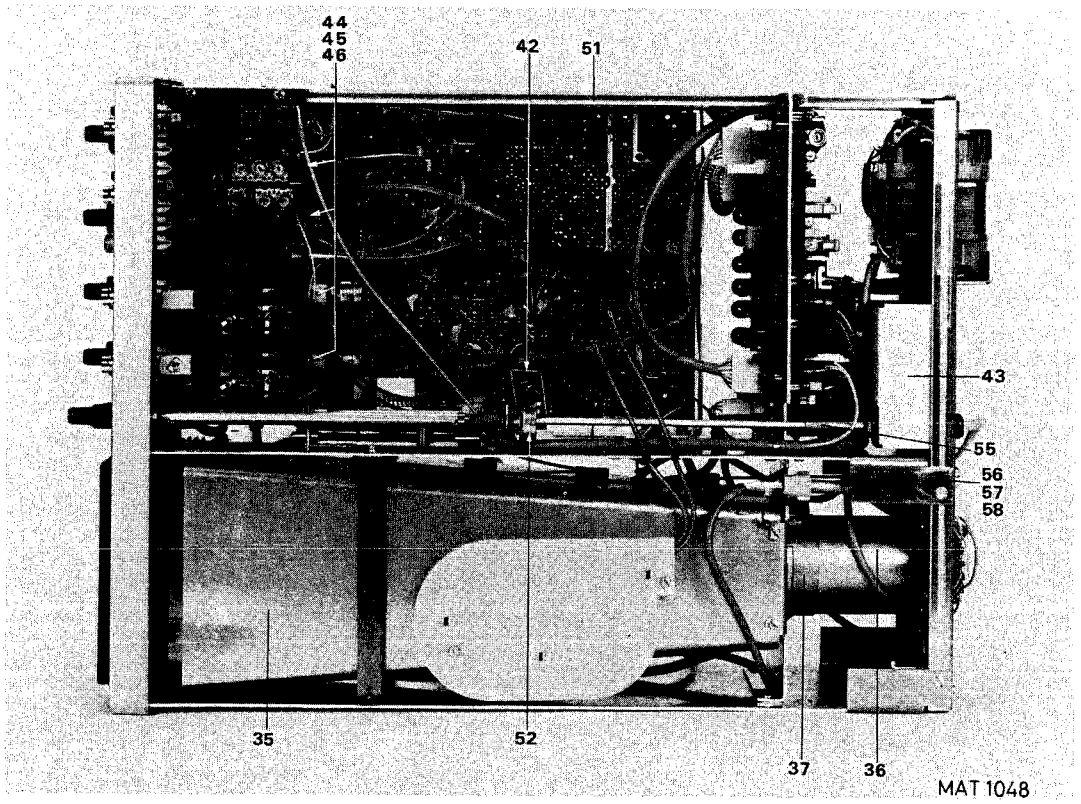
44
45
46
42
51
43
55
56
57
58
35
52
37
36
MAT 1048

7.1. MECHANICAL

Item	*Description*	*Ordering code*
1.	Cover assy	5322 447 90013
2.	Cast aluminium front frame	5322 464 90097
3.	Bezel	5322 450 74009
4.	Contrast filter blue	5322 480 34074
5.	Contrast filter grey	5322 480 34046
6.	Pushbutton knob green/grey	5322 414 26415
	Pushbutton knob light/grey	5322 414 20002
7.	Pushbutton knob red	5322 414 20004
	Pushbutton knob grey	5322 414 20003
8.	Knob	5322 414 34134
9.	Clamping spring	5322 492 64337
10.		5322 325 84011
11.	Calibration terminal	5322 530 70296
12.		5322 532 54198
13.	10-turn dial	5322 414 34147
14.	Knob dia 10 shaft 4mm.	5322 414 34091
15.	Knob cover grey	5322 414 74015
16.	Knob cover blue	5322 414 74029
17.	Knob	5322 414 34217
18.	Knob	5322 414 34079
19.	Knurled nut	5322 505 14178
20.	Nut 1/4 UNF	5322 506 14005
21.	TOOTHED WASHER	5322 530 80218
22.	Knob dia. 14 shaft 6	5322 414 34136
23.	Knob dia. 10 shaft 4	5322 414 34091
24.	Handle profile	5322 498 54077
25.	Handle arm	5322 498 54072
26.	Bearing bush	5322 520 14267
27.	Spring	5322 530 84075
28.	Stop plate	5322 528 34128
29.	Knob	5322 414 64053
30.	Screw	4822 502 30004
31.	Washer	4822 532 10582
32.	Cover	5322 447 94403
33.	Cast aluminium rear frame	5322 464 9096
34.	Text plate	5322 455 71002
35.	CRT screening	5322 447 90014
36.	CRT screening tube	5322 532 80666
36a.	CRT rubber strip	5322 466 64211
37.	CRT clamping strip	5322 405 90011
38.	Time base inner shaft	5322 535 70622
39.	Intens innner shaft	5322 535 91218
40.	Attenuator shaft	5322 535 91219
41.	Focus shaft	5322 535 70623
42.	Insulation strip	5322 466 91005
43.	Safety strip	5322 466 91006
44.	Coupling bush	5322 532 60758
45.	Coupling disk 6mm.	5322 528 20335
46.	Coupling disk 4mm.	5322 528 20333
47.	CRT mounting plate 1	5322 466 80799
48.	CRT mounting plate 2	5322 466 80801
49.	CRT mounting plate 3	5322 466 80802
50.	Plastic profile CRT mounting	5322 466 91008
51.	Spacer	5322 466 80803

52.	Insulation plate	5322 466 91007
53.	Plastic rear cover	5322 447 90015
54.	LED holder	5322 255 40231
55.	Coupling bush	5322 532 51241
56.	BNC connector	5322 532 20749
57.	Nut	5322 506 14001
58.	Solder tag	5322 290 34022

7.2. ELECTRICAL

CAPACITORS

POSNR	DESCRIPTION			ORDERING CODE
C 101	100NF 10%		400V	4822 121 40012
C 102	12PF	2	500	4822 122 31196
C 103	47PF	2	500	4822 122 31072
C 104	3,9PF 0,25PF		500	4822 122 31217
C 106	5,5PF			5322 125 54027
C 107	15PF	2	500	4822 122 31197
C 108	15PF	2	500	4822 122 31197
C 109	5,5PF			5322 125 54027
C 111	18PF			5322 125 50051
C 112	47PF	2	500	4822 122 31072
C 113	1,5PF 0,25PF		500	4822 122 31184
C 114	3PF			5322 125 54026
C 116	3PF			5322 125 54026
C 117	27PF	2	100	4822 122 30045
C 118	3,3PF 0,25PF		500	4822 122 31188
C 119	3PF			5322 125 54026
C 121	3PF			5322 125 54026
C 122	120PF	2	100	4822 122 31348
C 123	120PF	2	100	4822 122 31348
C 201	100NF 10%		400V	4822 121 40012
C 202	12PF	2	500	4822 122 31196
C 203	47PF	2	500	4822 122 31072
C 204	3,9PF 0,25PF		500	4822 122 31217
C 206	5,5PF			5322 125 54027
C 207	15PF	2	500	4822 122 31197
C 208	15PF	2	500	4822 122 31197
C 209	5,5PF			5322 125 54027
C 211	18PF			5322 125 50051
C 212	47PF	2	500	4822 122 31072
C 213	1,5PF 0,25PF		500	4822 122 31184
C 214	3PF			5322 125 54026
C 216	3PF			5322 125 54026
C 217	27PF	2	100	4822 122 30045
C 218	3,3PF 0,25PF		500	4822 122 31188
C 219	3PF			5322 125 54026
C 221	3PF			5322 125 54026
C 222	120PF	2	100	4822 122 31348
C 223	120PF	2	100	4822 122 31348
C 301	22NF-20+80		40	4822 122 30103
C 302	22NF-20+80		40	4822 122 30103
C 303	47PF	2	100	4822 122 31072
C 304	20PF			4822 125 50045
C 307	180PF	2	100	4822 122 31352
C 308	5,6PF 0,25PF		100	4822 122 31047
C 311	22NF-20+80		40	4822 122 30103
C 312	33PF	2	100	4822 122 31067
C 313	10PF	2	100	4822 122 31054
C 314	22NF-20+80		40	4822 122 30103
C 317	22NF-20+80		40	4822 122 30103
C 318	22NF-20+80		40	4822 122 30103
C 319	22NF-20+80		40	4822 122 30103
C 321	22NF-20+80		40	4822 122 30103
C 322	150PF	2	100	4822 122 31085
C 401	22NF-20+80		40	4822 122 30103
C 402	22NF-20+80		40	4822 122 30103
C 403	47PF	2	100	4822 122 31072
C 404	20PF			4822 125 50045

POSNR	DESCRIPTION		ORDERING CODE
C 407	180PF 2	100	4822 122 31352
C 408	5,6PF 0,25PF	100	4822 122 31047
C 409	3,5PF		5322 125 50048
C 411	22NF-20+80	40	4822 122 30103
C 412	33PF 2	100	4822 122 31067
C 413	10PF 2	100	4822 122 31054
C 414	22NF-20+80	40	4822 122 30103
C 416	22NF-20+80	40	4822 122 30103
C 417	22NF-20+80	40	4822 122 30103
C 418	22NF-20+80	40	4822 122 30103
C 419	22NF-20+80	40	4822 122 30103
C 421	22NF-20+80	40	4822 122 30103
C 422	150PF 2	100	4822 122 31085
C 501	22NF-20+80	40	4822 122 30103
C 502	4,7NF-20+80	40	4822 122 31125
C 503	270PF 10	100	4822 122 30095
C 504	2,7NF 10	100	4822 122 30057
C 506	2,7NF 10	100	4822 122 30057
C 507	22NF-20+80	40	4822 122 30103
C 508	22NF-20+80	40	4822 122 30103
C 601	22NF-20+80	40	4822 122 30103
C 602	18PF 2	100	4822 122 31061
C 603	10NF	630V	4822 121 41134
C 604	180PF 2	100	4822 122 31352
C 606	1NF 10	100	4822 122 30027
C 607	56PF 2	100	4822 122 31521
C 608	47PF 2	100	4822 122 31072
C 609	40PF		4822 125 50092
C 611	40PF		4822 125 50092
C 612	33PF 2	100	4822 122 31067
C 613	22NF-20+80	40	4822 122 30103
C 614	22NF-20+80	40	4822 122 30103
C 616	10PF 2	100	4822 122 31054
C 617	1PF 0,25PF	100	4822 122 30104
C 618	10PF 2	100	4822 122 31054
C 619	1PF 0,25PF	100	4822 122 30104
C 621	3,5PF		5322 125 50048
C 623	22NF-20+80	40	4822 122 30103
C 701	2,2PF 0,25PF	100	4822 122 31036
C 702	22NF-20+80	40	4822 122 30103
C 703	150NF 10%	100V	4822 121 40423
C 704	33PF 2	500	4822 122 31202
C 706	15PF 2	500	4822 122 31197
C 707	18PF 2	500	4822 122 31198
C 708	150PF 2	100	4822 122 31413
C 709	470NF 10%	100V	4822 121 40438
C 711	470NF 10%	100V	4822 121 40438
C 712	220NF 10%	100V	4822 121 40427
C 713	22NF-20+80	40	4822 122 30103
C 714	3,9PF 0,25PF	100	5322 122 34107
C 717	22NF-20+80	40	4822 122 30103
C 801	39PF 2	500	4822 122 31203
C 802	8,2PF 0,25PF	500	4822 122 31194
C 803	1PF 0,25PF	100	4822 122 30104
C 804	220NF 10%	100V	4822 121 40427
C 806	22NF-20+80	40	4822 122 30103
C 807	22NF-20+80	40	4822 122 30103
C 808	22NF-20+80	40	4822 122 30103
C 809	22NF-20+80	40	4822 122 30103
C 902	15UF-10+50	16	4822 124 20687

POSNR	DESCRIPTION		ORDERING CODE
C 903	1NF 10	100	4822 122 30027
C 904	47UF-10+50	25	4822 124 20699
C 906	22PF 2	100	4822 122 31063
C 907	56PF 2	100	4822 122 31521
C 908	390PF 2	100	4822 122 31426
C 909	22NF-20+80	40	4822 122 30103
C 910	1NF 10	100	4822 122 30027
C 911	2.4NF 1%	63V	5322 121 54054
C 912	2.2UF 5%	100V	5322 121 44246
C 913	4,7UF-10+50	63	5322 124 24211
C 914	15NF 10%	630V	5322 121 40324
C 916	1NF 10	100	4822 122 30027
C 917	4,7UF 50%	16V	4822 124 20686
C 918	22NF 0	40	4822 122 30103
C 1001	33UF-10+50	6,3	4822 124 20669
C 1003	22NF-20+80	40	4822 122 30103
C 1004	22NF-20+80	40	4822 122 30103
C 1005	47PF 2	100	4822 122 31072
C 1006	22NF-20+80	40	4822 122 30103
C 1007	470PF 10	100	4822 122 30034
C 1008	22NF-20+80	40	4822 122 30103
C 1009	1.1NF	630V	5322 121 54134
C 1011	150NF 10%	100V	5322 121 40323
C 1012	1NF 10	100	4822 122 30027
C 1013	22NF-20+80	40	4822 122 30103
C 1101	10NF-20+80	40	4822 122 30043
C 1102	68PF 2	100	4822 122 31349
C 1103	10NF-20+80	40	4822 122 30043
C 1104	22NF-20+80	40	4822 122 30103
C 1106	22NF-20+80	40	4822 122 30103
C 1107	82PF 2	100	4822 122 31243
C 1108	33PF 2	100	5322 122 31556
C 1109	33PF 2	100	5322 122 31556
C 1111	22NF-20+80	40	4822 122 30103
C 1112	27PF 2	100	4822 122 30045
C 1113	100PF 2	100	4822 122 31316
C 1114	1NF 10	100	4822 122 30027
C 1201	220NF 10%	100V	4822 121 40427
C 1202	22NF-20+80	40	4822 122 30103
C 1204	3,5PF		5322 125 50048
C 1206	22NF 10%	250V	4822 121 40407
C 1207	100NF 10%	250V	4822 121 41161
C 1208	22NF-20+80	40	4822 122 30103
C 1209	3,5PF		5322 125 50048
C 1212	22NF 10%	250V	4822 121 40407
C 1213	100NF 10%	250V	4822 121 41161
C 1214	22NF-20+80	40	4822 122 30103
C 1301	10NF-20+50	100	4822 122 31414
C 1302	220NF 10%	100V	4822 121 40232
C 1303	1.5UF 10%	100V	5322 121 40227
C 1304	10NF-20+50	100	4822 122 31414
C 1305	220NF 10%	100V	4822 121 40232
C 1306	4,7UF-10+50	63	5322 124 24211
C 1307	680NF 10%	100V	5322 121 40233
C 1308	680NF 10%	100V	5322 121 40233
C 1309	680NF 10%	100V	5322 121 40233
C 1310	180PF 2	100	5322 122 34144
C 1311	10NF-20+50	100	4822 122 31414
C 1312	10NF-20+50	100	4822 122 31414
C 1313	10NF-20+50	100	4822 122 31414
C 1314	150NF 10%	100V	5322 121 40323
C 1315	10NF-20+50	100	4822 122 31414
C 1316	10NF-20+50	100	4822 122 31414
C 1317	10NF-20+50	100	4822 122 31414
C 1318	4,7PF 0,25PF	500	4822 122 31189

POSNR	DESCRIPTION		ORDERING CODE
C 1319	0,68PF 0,25PF	500	4822 122 31213
C 1321	10PF 2	100	4822 122 31054
C 1501	22PF 2	100	4822 122 31063
C 1504	22NF 10%	400V	5322 121 44232
C 1505	270PF 2	100	4822 122 31331
C 1506	4,7NF 10	100	4822 122 30128
C 1507	4,7NF 10	100	4822 122 30128
C 1508	1,5NF 10%	1600V	4822 121 40354
C 1509	22NF-20+80	40	4822 122 30103
C 1510	10NF-20+50	100	4822 122 31414
C 1511	1,5NF 10%	1600V	4822 121 40354
C 1512	1,5NF 10%	1600V	4822 121 40354
C 1513	10NF-20+50	100	4822 122 31414
C 1514	68NF 10%	250V	5322 121 44137
C 1515	10NF-20+50	100	4822 122 31414
C 1516	10NF 10%	630V	5322 121 44201
C 1517	33PF 2	100	4822 122 31067
C 1520	10NF-20+50	100	4822 122 31414
C 1601	1NF 10	100	4822 122 30027
C 1602	1.1NF	630V	5322 121 54134
C 1603	33UF-10+50	16	4822 124 20688
C 1604	22UF-10+50	25	4822 124 20698
C 1605	22UF-10+50	25	4822 124 20698
C 1606	1NF 10	100	4822 122 30027
C 1607	330NF 10%	100V	4822 121 40257
C 1608	10NF-20+50	100	4822 122 31414
C 1609	22UF-10+50	25	4822 124 20698
C 1610			5322 121 54261
C 1611	10NF-20+50	100	4822 122 31414
C 1612	1NF 10	100	4822 122 30027
C 1613	1NF 10	100	4822 122 30027
C 1614	220NF 10%	100V	4822 121 40232
C 1615	3,3NF 10	100	4822 122 30099
C 1616	220NF 10%	100V	4822 121 40232
C 1617	680NF 10%	100V	5322 121 40233
C 1619	10NF-20+50	100	4822 122 31414
C 1620	10NF-20+50	100	4822 122 31414
C 1621	10NF-20+50	100	4822 122 31414
C 1622	47NF 10%	250V	5322 121 44138
C 1623	47NF 10%	250V	5322 121 44138
C 1624	68UF-10+50	16	4822 124 20689
C 1626	10NF 10%	630V	5322 121 44201
C 1627	470PF 20%	4KV	5322 122 54004
C 1628	470PF 20%	4KV	5322 122 54004
C 1629	470PF 20%	4KV	5322 122 54004
C 1631	470PF 20%	4KV	5322 122 54004
C 1632	600PF	9KV	5322 122 24001
C 1633	22NF 10%	1600V	4822 121 40196
C 1634	22NF 10%	1600V	4822 121 40196
C 1636	47NF 10%	250V	5322 121 44138
C 1637	470NF 10%	100V	5322 121 40175
C 1638	22UF-10+50	25	4822 124 20698
C 1639	4,7UF-10+50	250	4822 124 21157
C 1641	4,7UF-10+50	250	4822 124 21157
C 1642	100UF-10+50	40	4822 124 20715
C 1643	470UF-10+50	6,3	4822 124 20673
C 1644	100UF-10+50	10	4822 124 20679
C 1645	220UF-10+50	16	4822 124 20693
C 1646	68UF-10+50	16	4822 124 20689
C 1647	220UF-10+50	16	4822 124 20693

POSNR	DESCRIPTION		ORDERING CODE
C 1648	68UF-10+50	16	4822 124 20689
C 1649	47UF-10+50	63	4822 124 20733
C 1651	47UF-10+50	63	4822 124 20733
C 1652	220UF-10+50	16	4822 124 20693
C 1653	220NF 10%	250V	4822 121 41169
C 1654	10UF-10+50	63	4822 124 20728
C 1656	10UF-10+50	63	4822 124 20728
C 1657	10UF-10+50	63	4822 124 20728
C 1658	33UF-10+50	16	4822 124 20688
C 1659	10NF-20+50	100	4822 122 31414
C 1661	10NF-20+50	100	4822 122 31414
C 1662	33UF-10+50	16	4822 124 20688
C 1663	47UF-10+50	10	4822 124 20678
C 1664	10NF-20+50	100	4822 122 31414
C 1666	10NF-20+50	100	4822 122 31414
C 1667	10NF-20+50	100	4822 122 31414
C 1668	10NF-20+50	100	4822 122 31414
C 1669	10NF-20+50	100	4822 122 31414
C 1671	10NF-20+50	100	4822 122 31414
C 1672	100NF 10%	250V	4822 121 41161
C 1673	100NF 10%	250V	4822 121 41161
C 1674	15UF-10+50	16	4822 124 20687
C 1676	15UF-10+50	16	4822 124 20687
C 1677	22NF-20+80	40	4822 122 30103
C 1678	15UF-10+50	16	4822 124 20687
C 1679	22NF-20+80	40	4822 122 30103
C 1681	33UF-10+50	16	4822 124 20688
C 1682	22NF-20+80	40	4822 122 30103
C 1683	22NF-20+80	40	4822 122 30103
C 1684	22NF-20+80	40	4822 122 30103
C 1686	33UF-10+50	6,3	4822 124 20669
C 1687	22NF-20+80	40	4822 122 30103
C 1688	22NF-20+80	40	4822 122 30103
C 1689	22NF-20+80	40	4822 122 30103
C 1691	22NF-20+80	40	4822 122 30103
C 1692	22NF-20+80	40	4822 122 30103
C 1693	15UF-10+50	16	4822 124 20687
C 1694	15UF-10+50	16	4822 124 20687
C 1695	22NF-20+80	40	4822 122 30103
C 1696	15UF-10+50	16	4822 124 20687
C 1697	15UF-10+50	16	4822 124 20687
C 1698	15UF-10+50	16	4822 124 20687
C 1699	22NF-20+80	40	4822 122 30103
C 1701	22NF-20+80	40	4822 122 30103
C 1702	15UF-10+50	16	4822 124 20687
C 1703	22NF-20+80	40	4822 122 30103
C 1704	15UF-10+50	16	4822 124 20687
C 1706	22NF-20+80	40	4822 122 30103
C 1707	22NF-20+80	40	4822 122 30103
C 1708	15UF-10+50	16	4822 124 20687
C 1709	15UF-10+50	16	4822 124 20687
C 1711	22NF-20+80	40	4822 122 30103
C 1712	15UF-10+50	16	4822 124 20687
C 1713	22NF-20+80	40	4822 122 30103
C 1714	15UF-10+50	16	4822 124 20687
C 1715	22NF-20+80	40	4822 122 30103
C 1716	22NF-20+80	40	4822 122 30103
C 1717	15UF-10+50	16	4822 124 20687
C 1718	22NF-20+80	40	4822 122 30103
C 1719	22NF-20+80	40	4822 122 30103
C 1721	4,7UF-10+50	250	4822 124 21157
C 1722	33UF-10+50	16	4822 124 20688
C 1727	22NF-20+80	40	4822 122 30103
C 1728	22NF-20+80	40	4822 122 30103
C 1729	22NF-20+80	40	4822 122 30103
C 1731	22NF-20+80	40	4822 122 30103
C 309	3,5PF		5322 125 50048

RESISTORS

POSNR		DESCRIPTION			ORDERING CODE
R	2	1K	20	0.1W	5322 101 24118
R	3	1K	20	0.1W	5322 101 64018
R	4				5322 103 30115
R	5	100K	20	0.1W	5322 101 44044
R	6	47K +47K	LIN	0,1W	5322 102 44004
R	10	10K	20	0.1W	5322 101 40096
R	13	10K	20	0.1W	5322 101 40096
R	101	1M	1	MR30	5322 116 54188
R	103	845K	1	MR30	5322 116 55379
R	106	681K	1	MR30	5322 116 54263
R	107	100	1	MR25	5322 116 54469
R	108	191K	1	MR30	5322 116 55319
R	109	205K	1	MR25	5322 116 54727
R	111	549K	1	MR30	5322 116 55139
R	114	8,2M	10	CR25	4822 110 72212
R	117	1M	1	MR30	5322 116 54188
R	118	8,25K	0,25	MR24C	5322 116 50979
R	201	1M	1	MR30	5322 116 54188
R	203	845K	1	MR30	5322 116 55379
R	206	681K	1	MR30	5322 116 54263
R	207	100	1	MR25	5322 116 54469
R	208	191K	1	MR30	5322 116 55319
R	209	205K	1	MR25	5322 116 54727
R	211	549K	1	MR30	5322 116 55139
R	214	8,2M	10	CR25	4822 110 72212
R	217	1M	1	MR30	5322 116 54188
R	218	8,25K	0,25	MR24C	5322 116 50979
R	301	51,1	1	MR25	5322 116 54442
R	302	51,1	1	MR25	5322 116 54442
R	303	806K	1	MR30	5322 116 55078
R	304	12,7K	1	MR25	5322 116 50443
R	306	470	20	0,5W	5322 101 14047
R	307	12,7K	1	MR25	5322 116 50443
R	308	6,19K	1	MR25	5322 116 50608
R	309	6,49K	1	MR25	5322 116 54603
R	311	619	1	MR25	5322 116 54529
R	312	511	0,5	MR25	4822 116 51282
R	313	732K	1	MR30	5322 116 55321
R	314	105	1	MR25	5322 116 54472
R	316	22K	20	0.5W	5322 101 14069
R	317	51,1K	1	MR25	5322 116 50672
R	318	909	1	MR25	5322 116 55278
R	319	5,9K	1	MR25	5322 116 50583
R	321	162	1	MR25	5322 116 50417
R	322	1K	20	0,5W	5322 100 10112
R	323	44,2	1	MR25	5322 116 50818
R	324	100	0,5	MR25	5322 116 55549
R	326	5,62K	0,5	MR25	4822 116 51281
R	327	909	0,5	MR25	5322 116 55278
R	328	51,1	1	MR25	5322 116 54442
R	329	44,2	1	MR25	5322 116 50818
R	331	51,1	1	MR25	5322 116 54442
R	332	100	0,5	MR25	5322 116 55549
R	333	909	0,5	MR25	5322 116 55278
R	334	5,62K	0,5	MR25	4822 116 51281
R	336	825	1	MR25	5322 116 54541
R	338	402	1	MR25	5322 116 54519
R	339	30,1	1	MR25	5322 116 50904
R	341	825	1	MR25	5322 116 54541
R	342	348	1	MR25	5322 116 54515
R	343	1,5K	5	0.5W	5322 116 34054
R	344	866	1	MR25	5322 116 54543

POSNR	DESCRIPTION			ORDERING CODE
R 346	249	1	MR25	5322 116 54499
R 347	100	20	0,5W	5322 101 14011
R 348	953	1	MR25	5322 116 54547
R 349	220	20	0.05W	4822 100 10019
R 351	953	1	MR25	5322 116 54547
R 352	100	1	MR25	5322 116 54469
R 353	10	1	MR25	5322 116 50452
R 354	909	1	MR25	5322 116 55278
R 356	100	1	MR25	5322 116 54469
R 357	121	1	MR25	5322 116 54426
R 358	121	1	MR25	5322 116 54426
R 361	17,8K	1	MR25	5322 116 54637
R 362	5,11K	1	MR25	5322 116 54595
R 368	17,8K	1	MR25	5322 116 54637
R 369	5,9K	1	MR25	5322 116 50583
R 371	178	1	MR25	5322 116 54492
R 373	178	1	MR25	5322 116 54492
R 377	2,26K	1	MR25	5322 116 50675
R 378	100	1	MR25	5322 116 54469
R 401	51,1	1	MR25	5322 116 54442
R 402	51,1	1	MR25	5322 116 54442
R 403	806K	1	MR30	5322 116 55078
R 404	75	1	MR25	5322 116 54459
R 406	470	20	0,5W	5322 101 14047
R 407	12,7K	1	MR25	5322 116 50443
R 408	6,19K	1	MR25	5322 116 50608
R 409	6,49K	1	MR25	5322 116 54603
R 411	619	1	MR25	5322 116 54529
R 412	511	0,5	MR25	4822 116 51282
R 413	732K	1	MR30	5322 116 55321
R 414	105	1	MR25	5322 116 54472
R 416	22K	20	0.5W	5322 101 14069
R 417	51,1K	1	MR25	5322 116 50672
R 418	909	1	MR25	5322 116 55278
R 419	5,9K	1	MR25	5322 116 50583
R 421	162	1	MR25	5322 116 50417
R 422	1K	20	0,5W	5322 100 10112
R 423	44,2	1	MR25	5322 116 50818
R 424	100	0,5	MR25	5322 116 55549
R 426	5,62K	0,5	MR25	4822 116 51281
R 427	909	0,5	MR25	5322 116 55278
R 428	51,1	1	MR25	5322 116 54442
R 429	44,2	1	MR25	5322 116 50818
R 431	51,1	1	MR25	5322 116 54442
R 432	100	0,5	MR25	5322 116 55549
R 433	909	0,5	MR25	5322 116 55278
R 434	5,62K	0,5	MR25	4822 116 51281
R 436	825	1	MR25	5322 116 54541
R 437	30,1	1	MR25	5322 116 50904
R 438	402	1	MR25	5322 116 54519
R 439	30,1	1	MR25	5322 116 50904
R 441	825	1	MR25	5322 116 54541
R 442	158	0,5	MR25	5322 116 55418
R 443	1,5K	5	0.5W	5322 116 34054
R 444	866	1	MR25	5322 116 54543

POSNR	DESCRIPTION			ORDERING CODE
R 448	1K	1	MR25	5322 116 54549
R 448	100	20	0,5W	5322 101 14011
R 451	1K	1	MR25	5322 116 54549
R 452	100	1	MR25	5322 116 54469
R 453	10	1	MR25	5322 116 50452
R 454	909	1	MR25	5322 116 55278
R 456	100	1	MR25	5322 116 54469
R 457	121	1	MR25	5322 116 54426
R 458	121	1	MR25	5322 116 54426
R 459	31,6K	1	MR25	5322 116 54657
R 461	17,8K	1	MR25	5322 116 54637
R 462	5,11K	1	MR25	5322 116 54595
R 464	17,8K	1	MR25	5322 116 54637
R 466	14K	1	MR25	5322 116 54629
R 467	8,25K	1	MR25	5322 116 54558
R 468	17,8K	1	MR25	5322 116 54637
R 469	5,9K	1	MR25	5322 116 50583
R 471	178	1	MR25	5322 116 54492
R 473	178	1	MR25	5322 116 54492
R 474	33,2K	1	MR25	4822 116 51259
R 476	47K	20	0,5W	5322 101 14048
R 477	2,26K	1	MR25	5322 116 50675
R 478	100	1	MR25	5322 116 54469
R 501	100	1	MR25	5322 116 54469
R 502	1,27K	1	MR25	5322 116 50555
R 503	383	1	MR25	5322 116 54518
R 504	750	1	MR25	4822 116 51234
R 506	1,27K	1	MR25	5322 116 50555
R 507	22,6K	1	MR25	5322 116 50481
R 508	6,81K	1	MR25	5322 116 54012
R 509	2,49K	1	MR25	5322 116 50581
R 511	4,02K	1	MR25	5322 116 55448
R 512	2,49K	1	MR25	5322 116 50581
R 513	4,02K	1	MR25	5322 116 55448
R 514	4,02K	1	MR25	5322 116 55448
R 516	100	1	MR25	5322 116 54469
R 517	4,02K	1	MR25	5322 116 55448
R 601	8,25K	1	MR25	5322 116 54558
R 602	4,02K	1	MR25	5322 116 55448
R 603	100	1	MR25	5322 116 54469
R 604	100	1	MR25	5322 116 54469
R 606	121	1	MR25	5322 116 54426
R 607	121	1	MR25	5322 116 54426
R 608	1,33K	1	MR25	5322 116 54561
R 609	7,87K	1	MR25	5322 116 50458
R 611	4,7K	20	0.5W	5322 100 10114
R 612	10K	20	0,5W	5322 100 10113
R 613	2,2K	20	0.5W	5322 101 14008
R 614	30,1	1	MR25	5322 116 50904
R 616	100	20	0.05W	4822 100 10075
R 617	30,1	1	MR25	5322 116 50904
R 618	28,7	1	MR25	5322 116 54068
R 619	28,7	1	MR25	5322 116 54068
R 621	169	1	MR25	5322 116 54489
R 622	7,87K	1	MR25	5322 116 50458
R 623	2,26K	1	MR25	5322 116 50675
R 624	4,99	1	MR25	5322 116 50568
R 626	100	1	MR25	5322 116 54469
R 627	10K	1	MR25	4822 116 51253
R 628	100	1	MR25	5322 116 54469
R 629	86,6	1	MR25	5322 116 54464
R 631	86,6	1	MR25	5322 116 54464
R 632	1K	1	MR25	5322 116 54549
R 633	1,15K	1	MR25	5322 116 50415
R 634	909	1	MR25	5322 116 55278

POSNR		DESCRIPTION			ORDERING CODE		
R	636	681	1	MR25	4822	116	51233
R	637	909	1	MR25	5322	116	55278
R	638	1K	1	MR25	5322	116	54549
R	639	1,15K	1	MR25	5322	116	50415
R	641	100K	1	MR25	4822	116	51268
R	642	4,7K	20	0.75W	5322	100	10139
R	643	90,9	1	MR25	5322	116	54466
R	644	90,9	1	MR25	5322	116	54466
R	646	51,1	1	MR25	5322	116	54442
R	647	100	20	0.75W	5322	100	10138
R	648	51,1	1	MR25	5322	116	54442
R	649	90,9	1	MR25	5322	116	54466
R	651	90,9	1	MR25	5322	116	54466
R	652	140	1	MR25	5322	116	54484
R	653	3,48K	1	MR25	5322	116	54585
R	654	3,01K	1	MR25	4822	116	51246
R	656	1,78K	1	MR25	5322	116	50515
R	657	1,78K	1	MR25	5322	116	50515
R	658	1,78K	1	MR25	5322	116	50515
R	659	1,78K	1	MR25	5322	116	50515
R	700	51,1K	1	MR25	5322	116	50672
R	701	22K	20	0.5W	5322	101	14069
R	702	20,5K	1	MR25	5322	116	54643
R	703	10	1	MR25	5322	116	50452
R	704	22K	20	0.5W	5322	101	14069
R	705	51,1K	1	MR25	5322	116	50672
R	706	20,5K	1	MR25	5322	116	54643
R	707	3,65K	1	MR25	5322	116	54587
R	708	22K	20	0.5W	5322	101	14069
R	709	20,5K	1	MR25	5322	116	54643
R	710	20,5K	1	MR25	5322	116	54643
R	711	10	1	MR25	5322	116	50452
R	712	4,64K	1	MR25	5322	116	50484
R	713	7,5K	1	MR25	5322	116	54608
R	714	1,62K	1	MR25	5322	116	55359
R	716	2,05K	1	MR25	5322	116	50664
R	717	6,81K	1	MR25	5322	116	54012
R	718	6,49K	1	MR25	5322	116	54603
R	719	5,11	1	MR25	5322	116	54192
R	721	1,62K	1	MR25	5322	116	55359
R	722	681	1	MR25	4822	116	51233
R	723	10	1	MR25	5322	116	50452
R	724	154K	1	MR25	5322	116	54714
R	726	511K	1	MR30	5322	116	54123
R	728	1M	1	MR30	5322	116	54188
R	729	1K	1	MR25	5322	116	54549
R	730	121	1	MR25	5322	116	54426
R	731	953K	1	MR30	5322	116	55257
R	732	133K	1	MR25	5322	116	54708
R	733	51,1	1	MR25	5322	116	54442
R	734	511K	1	MR25	5322	116	55258
R	736	4,02K	1	MR25	5322	116	55448
R	737	8,25K	1	MR25	5322	116	54558
R	738	3,83K	1	MR25	5322	116	54589
R	741	68,1K	1	MR25	5322	116	54683
R	742	51,1K	1	MR25	5322	116	50672
R	743	51,1K	1	MR25	5322	116	50672
R	744	68,1K	1	MR25	5322	116	54683
R	746	226K	1	MR25	5322	116	54729
R	747	100K	1	MR25	4822	116	51268
R	748	12,7K	1	MR25	5322	116	50443
R	749	470	20	0.05W	4822	100	10038
R	751	12,7K	1	MR25	5322	116	50443
R	752	2,87K	1	MR25	5322	116	50414
R	753	562	1	MR25	5322	116	54009

POSNR		DESCRIPTION			ORDERING CODE
R	754	562	1	MR25	5322 116 54009
R	756	3,65K	1	MR25	5322 116 54587
R	757	1,54K	1	MR25	5322 116 50586
R	758	1,54K	1	MR25	5322 116 50586
R	761	2,37K	1	MR25	5322 116 54576
R	762	4,02K	1	MR25	5322 116 55448
R	763	20,5K	1	MR25	5322 116 54643
R	764	100K	1	MR25	4822 116 51268
R	766	2,26K	1	MR25	5322 116 50675
R	767	1,4K	1	MR25	5322 116 54562
R	768	1,54K	1	MR25	5322 116 50586
R	769	9,09K	1	MR25	4822 116 51284
R	771	20,5K	1	MR25	5322 116 54643
R	801	22K	20	0.5W	5322 101 14069
R	802	20,5K	1	MR25	5322 116 54643
R	803	10	1	MR25	5322 116 50452
R	804	22K	20	0.5W	5322 101 14069
R	806	20,5K	1	MR25	5322 116 54643
R	807	3,83K	1	MR25	5322 116 54589
R	807	1,69K	1	MR25	5322 116 54567
R	808	22K	20	0.5W	5322 101 14069
R	809	20,5K	1	MR25	5322 116 54643
R	811	10	1	MR25	5322 116 50452
R	812	4,99	1	MR25	5322 116 50568
R	814	2,49K	1	MR25	5322 116 50581
R	816	1K	1	MR25	5322 116 54549
R	818	825	1	MR25	5322 116 54541
R	819	1,69K	1	MR25	5322 116 54567
R	821	3,01K	1	MR25	4822 116 51246
R	822	10	1	MR25	5322 116 50452
R	823	51,1	1	MR25	5322 116 54442
R	824	17,8K	1	MR25	5322 116 54637
R	826	511K	1	MR25	5322 116 55258
R	827	1,78K	1	MR25	5322 116 50515
R	828	12,7K	1	MR25	5322 116 50443
R	829	470	20	0.05W	4822 100 10038
R	831	12,7K	1	MR25	5322 116 50443
R	832	562	1	MR25	5322 116 54009
R	833	562	1	MR25	5322 116 54009
R	834	4,02K	1	MR25	5322 116 55448
R	836	8,25K	1	MR25	5322 116 54558
R	837	3,65K	1	MR25	5322 116 54587
R	838	1,54K	1	MR25	5322 116 50586
R	839	4,02K	1	MR25	5322 116 55448
R	841	8,25K	1	MR25	5322 116 54558
R	842	3,32K	1	MR25	5322 116 54005
R	843	100K	1	MR25	4822 116 51268
R	844	2,49K	1	MR25	5322 116 50581
R	846	1,4K	1	MR25	5322 116 54562
R	847	1,78K	1	MR25	5322 116 50515
R	901	261K	0,5	MR25	5322 116 54736
R	902	412K	0,5	MR25	5322 116 55424
R	903	205K	0,5	MR25	5322 116 55387
R	904	41,2K	0,5	MR25	5322 116 55423
R	906	8,06K	0,5	MR25	5322 116 55428
R	907	2K	0,5	MR25	4822 116 51243
R	908	365	0,5	MR25	5322 116 55422
R	909	412K	0,5	MR25	5322 116 55424
R	911	82,5K	0,5	MR25	5322 116 55374
R	912	20,5K	0,5	MR25	5322 116 55419
R	913	4,02K	0,1	MR24E	5322 116 54283
R	914	768	0,5	MR25	5322 116 55427
R	915	1,69K	1	MR25	5322 116 54567
R	916	953K	0,5	MR30	5322 116 55382
R	917	909	1	MR25	5322 116 55278

POSNR	DESCRIPTION			ORDERING CODE
R 918	5,11K	1	MR25	5322 116 54595
R 919	5,11K	1	MR25	5322 116 54595
R 920	100	1	MR25	5322 116 54469
R 921	825	1	MR25	5322 116 54541
R 922	5,11K	1	MR25	5322 116 54595
R 923	5,11K	1	MR25	5322 116 54595
R 925	1K	1	MR25	5322 116 54549
R 926	5,11K	1	MR25	5322 116 54595
R 927	5,11K	1	MR25	5322 116 54595
R 928	6,19K	1	MR25	5322 116 50608
R 929	1,27K	1	MR25	5322 116 50555
R 930	162	1	MR25	5322 116 50417
R 931	402	1	MR25	5322 116 54519
R 932	10K	1	MR25	4822 116 51253
R 933	44,2	1	MR25	5322 116 50818
R 934	32,4	0,5	MR25	5322 116 55421
R 935	1K	1	MR25	5322 116 54549
R 936	30,1	1	MR25	5322 116 50904
R 937	8,25	1	MR25	5322 116 54099
R 938	1,54K	1	MR25	5322 116 50586
R 939	23,7K	1	MR25	5322 116 54646
R 940	5,11K	1	MR25	5322 116 54595
R 941	6,19K	1	MR25	5322 116 50608
R 942	9,53K	1	MR25	5322 116 54617
R 943	37,4K	1	MR25	5322 116 54663
R 944	22K	20	0.5W	5322 101 14069
R 946	15,4K	1	MR25	5322 116 50479
R 947	26,1K	1	MR25	5322 116 54651
R 948	1,4K	1	MR25	5322 116 54562
R 949	44,2	1	MR25	5322 116 50818
R 951	33,2K	1	MR25	4822 116 51259
R 952	316	1	MR25	5322 116 54511
R 953	21,5K	1	MR25	5322 116 50451
R 954	2,05K	1	MR25	5322 116 50664
R 956	7,87K	1	MR25	5322 116 50458
R 1001	22K	20	0.05W	4822 100 10051
R 1002	22K	20	0.05W	4822 100 10051
R 1003	2,49K	1	MR25	5322 116 50581
R 1004	2,87K	1	MR25	5322 116 50414
R 1006	365	1	MR25	5322 116 54516
R 1007	154	1	MR25	5322 116 50506
R 1008	33,2K	1	MR25	4822 116 51259
R 1009	2,74K	1	MR25	5322 116 50636
R 1011	100	1	MR25	5322 116 54469
R 1012	5,11K	1	MR25	5322 116 54595
R 1013	2,26K	1	MR25	5322 116 50675
R 1014	44,2	1	MR25	5322 116 50818
R 1016	909	1	MR25	5322 116 55278
R 1017	2,74K	1	MR25	5322 116 50636
R 1018	4,99	1	MR25	5322 116 50568
R 1019	5,11K	1	MR25	5322 116 54595
R 1020	5,11K	1	MR25	5322 116 54595
R 1021	5,11K	1	MR25	5322 116 54595
R 1022	5,11K	1	MR25	5322 116 54595
R 1023	6,19K	1	MR25	5322 116 50608
R 1024	5,11K	1	MR25	5322 116 54595
R 1026	10K	1	MR25	4822 116 51253
R 1027	402	1	MR25	5322 116 54519
R 1028	383	1	MR25	5322 116 54518
R 1029	6,19K	1	MR25	5322 116 50608
R 1031	10	1	MR25	5322 116 50452
R 1032	15,4	1	MR25	5322 116 55573
R 1033	4,87K	1	MR25	5322 116 50509
R 1034	18,7K	1	MR25	5322 116 50558
R 1036	30,1K	1	MR25	5322 116 54655

POSNR	DESCRIPTION			ORDERING CODE
R 1037	22K	20	0.5W	5322 101 14069
R 1038	78,7K	1	MR25	5322 116 50533
R 1039	48,7K	1	MR25	5322 116 50442
R 1041	61,9K	1	MR25	5322 116 50872
R 1042	22K	20	0.05W	4822 100 10051
R 1043	44,2	1	MR25	5322 116 50818
R 1044	33,2K	1	MR25	4822 116 51259
R 1046	2,26K	1	MR25	5322 116 50675
R 1047	316	1	MR25	5322 116 54511
R 1048	2,05K	1	MR25	5322 116 50664
R 1049	3,83K	1	MR25	5322 116 54589
R 1051	51,1K	1	MR25	5322 116 50672
R 1052	44,2K	0,5	MR25	5322 116 55449
R 1053	8,45K	0,1	MR24E	5322 116 55222
R 1054	1,37K	0,5	MR25	5322 116 55446
R 1056	88,7K	0,5	MR25	5322 116 55452
R 1057	17,4K	0,5	MR25	5322 116 55447
R 1058	4,02K	0,5	MR25	5322 116 55448
R 1059	487	0,5	MR25	5322 116 55451
R 1061	909	1	MR25	5322 116 55278
R 1101	20,5K	1	MR25	5322 116 54643
R 1102	5,11K	1	MR25	5322 116 54595
R 1103	10K	1	MR25	4822 116 51253
R 1104	4,02K	1	MR25	5322 116 55448
R 1105	511	1	MR25	4822 116 51282
R 1106	26,1K	1	MR25	5322 116 54651
R 1107	10K	1	MR25	4822 116 51253
R 1108	1K	1	MR25	5322 116 54549
R 1109	2,05K	1	MR25	5322 116 50664
R 1111	5,11K	1	MR25	5322 116 54595
R 1112	6,81K	1	MR25	5322 116 54012
R 1113	36,5K	1	MR25	5322 116 50726
R 1114	8,25K	1	MR25	5322 116 54558
R 1116	681	1	MR25	4822 116 51233
R 1117	17,8K	1	MR25	5322 116 54637
R 1118	511	1	MR25	4822 116 51282
R 1119	100K	1	MR25	4822 116 51268
R 1121	7,87K	1	MR25	5322 116 50458
R 1122	3,48K	1	MR25	5322 116 54585
R 1123	7,87K	1	MR25	5322 116 50458
R 1124	100K	1	MR25	4822 116 51268
R 1126	5,11K	1	MR25	5322 116 54595
R 1127	8,25K	1	MR25	5322 116 54558
R 1128	8,25K	1	MR25	5322 116 54558
R 1129	26,1K	1	MR25	5322 116 54651
R 1131	14,7K	1	MR25	5322 116 54632
R 1132	30,1K	1	MR25	5322 116 54655
R 1133	7,5K	1	MR25	5322 116 54608
R 1134	24,9K	1	MR25	5322 116 54648
R 1136	4,02K	1	MR25	5322 116 55448
R 1137	4,22K	1	MR25	5322 116 50729
R 1138	562	1	MR25	5322 116 54009
R 1139	7,5K	1	MR25	5322 116 54608
R 1141	562	1	MR25	5322 116 54009
R 1142	24,9K	1	MR25	5322 116 54648
R 1143	7,5K	1	MR25	5322 116 54608
R 1144	14,7K	1	MR25	5322 116 54632
R 1146	715	1	MR25	5322 116 50571
R 1147	2,74K	1	MR25	5322 116 50636
R 1148	8,25K	1	MR25	5322 116 54558
R 1149	8,66K	1	MR25	5322 116 54613
R 1151	20,5K	1	MR25	5322 116 54643
R 1201	5,11K	1	MR25	5322 116 54595
R 1202	5,11K	1	MR25	5322 116 54595
R 1203	3,16K	1	MR25	5322 116 50579

POSNR	DESCRIPTION			ORDERING CODE
R 1204	4,02K	1	MR25	5322 116 55448
R 1206	3,16K	1	MR25	5322 116 50579
R 1207	64,9K	1	MR25	5322 116 50514
R 1208	16,2K	1	MR25	5322 116 55361
R 1209	2,26K	1	MR25	5322 116 50675
R 1211	3,01K	1	MR25	4822 116 51246
R 1212	3,01K	1	MR25	4822 116 51246
R 1213	249	1	MR25	5322 116 54499
R 1214	8,25K	1	MR25	5322 116 54558
R 1216	100	20	0.75W	5322 100 10138
R 1217	1K	20	0.75W	5322 100 10143
R 1219	10K	1	MR25	4822 116 51253
R 1222	383	1	MR25	5322 116 54518
R 1223	28,7K	1	MR25	5322 116 54653
R 1224	470K	20	0.13W	5322 101 10285
R 1226	100K	1	MR25	4822 116 51268
R 1227	383	1	MR25	5322 116 54518
R 1228	10K	1	MR25	4822 116 51253
R 1229	100	1	MR25	5322 116 54469
R 1231	4,87K	1	MR25	5322 116 50509
R 1232	154K	1	MR25	5322 116 54714
R 1233	20,5K	1	MR25	5322 116 54643
R 1234	30,1	1	MR25	5322 116 50904
R 1236	20,5K	1	MR25	5322 116 54643
R 1237	10K	1	MR25	4822 116 51253
R 1239	1K	1	MR25	5322 116 54549
R 1241	3,01K	1	MR25	4822 116 51246
R 1242	4,87K	1	MR25	5322 116 50509
R 1243	365K	1	MR30	5322 116 54762
R 1244	20,5K	1	MR25	5322 116 54643
R 1246	20,5K	1	MR25	5322 116 54643
R 1247	30,1	1	MR25	5322 116 50904
R 1248	154K	1	MR25	5322 116 54714
R 1249	4,87K	1	MR25	5322 116 50509
R 1301	5,11K	1	MR25	5322 116 54595
R 1302	5,11K	1	MR25	5322 116 54595
R 1303	1K	1	MR25	5322 116 54549
R 1304	1K	1	MR25	5322 116 54549
R 1305	100	1	MR25	5322 116 54469
R 1306	51,1K	1	MR25	5322 116 50672
R 1307	51,1K	1	MR25	5322 116 50672
R 1308	249	1	MR25	5322 116 54499
R 1309	100K	1	MR25	4822 116 51268
R 1310	51,1K	1	MR25	5322 116 50672
R 1311	301K	1	MR25	5322 116 54743
R 1312	51,1K	1	MR25	5322 116 50672
R 1313	20,5K	1	MR25	5322 116 54643
R 1314	5,11K	1	MR25	5322 116 54595
R 1315	1K	1	MR25	5322 116 54549
R 1316	5,11K	1	MR25	5322 116 54595
R 1317	402	1	MR25	5322 116 54519
R 1318	1K	1	MR25	5322 116 54549
R 1319	5,11K	1	MR25	5322 116 54595
R 1320	20,5K	1	MR25	5322 116 54643
R 1321	100K	1	MR25	4822 116 51268
R 1322	1K	1	MR25	5322 116 54549
R 1323	1K	1	MR25	5322 116 54549
R 1325	10K	1	MR25	4822 116 51253
R 1326	5,11K	1	MR25	5322 116 54595
R 1327	5,11K	1	MR25	5322 116 54595
R 1328	51,1K	1	MR25	5322 116 50672
R 1329	100K	1	MR25	4822 116 51268
R 1331	909K	1	MR25	5322 116 55533
R 1332	5,11K	1	MR25	5322 116 54595
R 1333	1,8M	5	VR25	4822 110 72194

POSNR	DESCRIPTION			ORDERING CODE
R 1334	5,11K	1	MR25	5322 116 54595
R 1335	5,11K	1	MR25	5322 116 54595
R 1336	51,1K	1	MR25	5322 116 50672
R 1337	133K	1	MR25	5322 116 54708
R 1338	470K	20	0.5W	5322 101 14144
R 1339	301K	1	MR25	5322 116 54743
R 1341	86,6K	1	MR25	5322 116 54692
R 1342	100K	20	0.5W	5322 100 10116
R 1343	86,6K	1	MR25	5322 116 54692
R 1344	1M	1	MR25	5322 116 55535
R 1346	301K	1	MR25	5322 116 54743
R 1347	4,7K	20	0.5W	5322 101 14292
R 1348	8,25K	1	MR25	5322 116 54558
R 1349	15,4K	1	MR25	5322 116 50479
R 1351	4,7K	20	0.5W	5322 101 14292
R 1352	15,4K	1	MR25	5322 116 50479
R 1353	100K	1	MR25	4822 116 51268
R 1354	1K	1	MR25	5322 116 54549
R 1356	100K	1	MR25	4822 116 51268
R 1357	4,7K	20	0.5W	5322 101 14292
R 1358	15,4K	1	MR25	5322 116 50479
R 1359	147K	1	MR25	5322 116 54712
R 1361	5,11K	1	MR25	5322 116 54595
R 1362	20,5K	1	MR25	5322 116 54643
R 1363	1K	1	MR25	5322 116 54549
R 1364	1,69K	1	MR25	5322 116 54567
R 1366	100K	1	MR25	4822 116 51268
R 1367	40,2K	1	MR25	5322 116 54665
R 1368	1K	1	MR25	5322 116 54549
R 1369	10K	1	MR25	4822 116 51253
R 1371	21,5K	1	MR25	5322 116 50451
R 1372	10K	20	0.5W	5322 101 14066
R 1373	61,9K	1	MR25	5322 116 50872
R 1374	14,7K	1	MR25	5322 116 54632
R 1376	61,9K	1	MR25	5322 116 50872
R 1377	61,9K	1	MR25	5322 116 50872
R 1378	12,1K	1	MR25	5322 116 50572
R 1379	511K	1	MR25	5322 116 55258
R 1381	51,1K	1	MR25	5322 116 50672
R 1382	20,5K	1	MR25	5322 116 54643
R 1383	10	1	MR25	5322 116 50452
R 1384	16,9K	1	MR25	5322 116 54635
R 1386	110K	1	MR25	5322 116 54701
R 1387	51,1K	1	MR25	5322 116 50672
R 1388	14K	1	MR25	5322 116 54629
R 1389	51,1K	1	MR25	5322 116 50672
R 1391	100K	1	MR25	4822 116 51268
R 1392	51,1K	1	MR25	5322 116 50672
R 1393	1K	1	MR25	5322 116 54549
R 1394	22K	20	0.5W	5322 100 10118
R 1396	16,2K	1	MR25	5322 116 55361
R 1397	100K	1	MR25	4822 116 51268
R 1398	20,5K	1	MR25	5322 116 54643
R 1399	6,49K	1	MR25	5322 116 54603
R 1400	10K	1	MR25	4822 116 51253
R 1401	20,5K	1	MR25	5322 116 54643
R 1402	7,87K	1	MR25	5322 116 50458
R 1403	10K	1	MR25	4822 116 51253
R 1404	4,02K	1	MR25	5322 116 55448
R 1406	20,5K	1	MR25	5322 116 54643
R 1407	5,11K	1	MR25	5322 116 54595
R 1408	51,1K	1	MR25	5322 116 50672
R 1409	51,1K	1	MR25	5322 116 50672
R 1411	127K	1	MR25	5322 116 54706
R 1412	36,5K	1	MR25	5322 116 50726

POSNR	DESCRIPTION			ORDERING CODE
R 1413	121K	1	MR25	5322 116 54704
R 1414	121K	1	MR25	5322 116 54704
R 1416	36,5K	1	MR25	5322 116 50726
R 1417	100	1	MR25	5322 116 54469
R 1418	100	1	MR25	5322 116 54469
R 1419	10K	20	0.5W	5322 101 14066
R 1421	51,1K	1	MR25	5322 116 50672
R 1426	51,1K	1	MR25	5322 116 50672
R 1427	5,11K	1	MR25	5322 116 54595
R 1428	20,5K	1	MR25	5322 116 54643
R 1429	1,87K	1	MR25	5322 116 50728
R 1431	7,87K	1	MR25	5322 116 50458
R 1432	4,87K	1	MR25	5322 116 50509
R 1433	7,15K	1	MR25	5322 116 54606
R 1434	2,74K	1	MR25	5322 116 50636
R 1436	2,05K	1	MR25	5322 116 50664
R 1437	71,5K	1	MR25	5322 116 54685
R 1438	47K	20	0.5W	5322 101 14293
R 1439	169K	1	MR25	5322 116 54718
R 1441	51,1K	1	MR25	5322 116 50672
R 1442	3,16K	1	MR25	5322 116 50579
R 1443	100K	1	MR25	4822 116 51268
R 1444	2,05K	1	MR25	5322 116 50664
R 1446	20,5K	1	MR25	5322 116 54643
R 1447	7,15K	1	MR25	5322 116 54606
R 1448	110K	1	MR25	5322 116 54701
R 1449	10K	1	MR25	4822 116 51253
R 1451	1,47K	1	MR25	5322 116 50635
R 1452	51,1K	1	MR25	5322 116 50672
R 1453	23,7K	1	MR25	5322 116 54646
R 1454	154K	1	MR25	5322 116 54714
R 1456	75K	1	MR25	5322 116 54686
R 1457	48,7K	1	MR25	5322 116 50442
R 1458	47K	20	0.5W	5322 101 14293
R 1459	71,5K	1	MR25	5322 116 54685
R 1461	178K	1	MR25	5322 116 54721
R 1462	51,1K	1	MR25	5322 116 50672
R 1463	47K	20	0.5W	5322 101 14293
R 1464	1,87K	1	MR25	5322 116 50728
R 1466	1,87K	1	MR25	5322 116 50728
R 1501	511	1	MR25	4822 116 51282
R 1502	226K	1	MR25	5322 116 54729
R 1503	6,19K	1	MR25	5322 116 50608
R 1504	6,19K	1	MR25	5322 116 50608
R 1506	22K	20	0.05W	4822 100 10051
R 1507	36,5K	1	MR25	5322 116 50726
R 1508	6,19K	1	MR25	5322 116 50608
R 1509	6,19K	1	MR25	5322 116 50608
R 1511	6,81K	1	MR25	5322 116 54012
R 1512	51,1K	1	MR25	5322 116 50672
R 1513	12,1K	1	MR25	5322 116 50572
R 1514	12,1K	1	MR25	5322 116 50572
R 1516	121	1	MR25	5322 116 54426
R 1517	24,9K	1	MR25	5322 116 54648
R 1518	464K	1	MR30	5322 116 54759
R 1519	4,02K	1	MR25	5322 116 55448
R 1521	487	1	MR25	5322 116 55451
R 1522	100	1	MR25	5322 116 54469
R 1523	64,9K	1	MR30	4822 116 51175
R 1524	511	1	MR25	4822 116 51282
R 1526	100	1	MR25	5322 116 54469
R 1527	6,81K	1	MR25	5322 116 54012
R 1528	24,9K	1	MR25	5322 116 54648
R 1529	26,1K	1	MR25	5322 116 54651
R 1531	12,1K	1	MR25	5322 116 50572

POSNR	DESCRIPTION			ORDERING CODE
R 1532	10K	20	0,5W	5322 100 10113
R 1533	1M	1	MR30	5322 116 54188
R 1534	1M	1	MR30	5322 116 54188
R 1538	2,7M	5	VR37	4822 110 42198
R 1539	2,7M	5	VR37	4822 110 42198
R 1541	4,7M	5	VR37	4822 110 42205
R 1542	16,2K	1	MR25	5322 116 55361
R 1543	26,1K	1	MR25	5322 116 54651
R 1544	78,7K	1	MR25	5322 116 50533
R 1546	100K	20	0.05W	4822 100 10072
R 1547	121K	1	MR25	5322 116 54704
R 1548	26,1K	1	MR25	5322 116 54651
R 1549	51,1K	1	MR25	5322 116 50672
R 1551	196K	1	MR25	5322 116 55364
R 1552	1M	20	0.05W	4822 100 10103
R 1553	383K	1	MR25	5322 116 55335
R 1554	301K	1	MR25	5322 116 54743
R 1556	46,4K	1	MR25	5322 116 50557
R 1557	51,1K	1	MR25	5322 116 50672
R 1558	23,7K	1	MR25	5322 116 54646
R 1559	21,5K	1	MR25	5322 116 50451
R 1561	12,1K	1	MR25	5322 116 50572
R 1562	1,33K	1	MR25	5322 116 54561
R 1563	4,7K	20	0.75W	5322 100 10139
R 1564	715	1	MR25	5322 116 50571
R 1566	100K	1	MR25	4822 116 51268
R 1601	47K	20	0.5W	5322 101 14293
R 1602	51,1K	1	MR25	5322 116 50672
R 1603	100K	1	MR25	4822 116 51268
R 1604	16,2K	1	MR25	5322 116 55361
R 1606	316K	1	MR25	5322 116 55268
R 1607	24,9K	1	MR25	5322 116 54648
R 1608	59K	1	MR25	5322 116 54678
R 1609	34,8K	1	MR25	5322 116 54661
R 1610	3,83K	1	MR25	5322 116 54589
R 1611	4,42K	1	MR25	5322 116 50556
R 1612	48,7K	1	MR25	5322 116 50442
R 1613	56,2K	1	MR25	4822 116 51264
R 1614	169K	1	MR25	5322 116 54718
R 1616	82,5K	1	MR25	5322 116 54689
R 1617	47K	20	0.05W	4822 100 10076
R 1618	13,3K	1	MR25	5322 116 55276
R 1619	10K	1	MR25	4822 116 51253
R 1621	36,5K	1	MR25	5322 116 50726
R 1622	100K	1	MR25	4822 116 51268
R 1623	422	1	MR25	5322 116 50459
R 1624	10K	1	MR25	4822 116 51253
R 1626	1	1	MR25	4822 116 51179
R 1627	1	1	MR25	4822 116 51179
R 1628	1,47	1	MR25	5322 116 55604
R 1629	464	1	MR25	5322 116 50536
R 1630	10K	1	MR25	4822 116 51253
R 1631	316	1	MR25	5322 116 54511
R 1632	2,87K	1	MR25	5322 116 50414
R 1633	1M	1	MR25	5322 116 55535
R 1634	30,1	1	MR25	5322 116 50904
R 1636	12,1K	1	MR25	5322 116 50572
R 1637	12,1K	1	MR25	5322 116 50572
R 1638	100K	1	MR25	4822 116 51268
R 1639	22,6	1	MR25	5322 116 50491
R 1640	464	1	MR25	5322 116 50536
R 1641	6,49M	1	VR68	5322 116 60125
R 1642	6,49M	1	VR68	5322 116 60125
R 1643	1M	5	VR37	4822 110 42187
R 1644	10K	1	MR25	4822 116 51253

POSNR	DESCRIPTION			ORDERING CODE
R 1647	64,9K	1	MR25	5322 116 50514
R 1648	681	1	MR25	4822 116 51233
R 1649	2,05K	1	MR25	5322 116 50664
R 1650	47K	20	0.5W	5322 101 14293
R 1651	1M	1	MR25	5322 116 55535
R 1652	78,7K	1	MR25	5322 116 50533
R 1653	56,2K	1	MR25	4822 116 51264
R 1654	7,87K	1	MR25	5322 116 50458
R 1655	4,64K	1	MR25	5322 116 50484
R 1656	10	1	MR25	5322 116 50452
R 1657	10	1	MR25	5322 116 50452
R 1658	10	1	MR25	5322 116 50452
R 1659	10	1	MR25	5322 116 50452
R 1660	51,1K	1	MR25	5322 116 50672
R 1661	5,11	1	MR25	5322 116 54192
R 1662	5,11	1	MR25	5322 116 54192
R 1663	1,33	1	MR25	5322 116 51357
R 1664	100	1	MR25	5322 116 54469
R 1666	100	1	MR25	5322 116 54469
R 1667	4,99	1	MR25	5322 116 50568
R 1668	4,99	1	MR25	5322 116 50568
R 1669	4,99	1	MR25	5322 116 50568
R 1671	1	1	MR25	4822 116 51179
R 1672	1	1	MR25	4822 116 51179
R 1673	4,99	1	MR25	5322 116 50568
R 1674	4,99	1	MR25	5322 116 50568
R 1676	4,99	1	MR25	5322 116 50568
R 1677	4,99	1	MR25	5322 116 50568
R 1678	4,99	1	MR25	5322 116 50568
R 1679	4,99	1	MR25	5322 116 50568
R 1681	4,99	1	MR25	5322 116 50568
R 1682	4,99	1	MR25	5322 116 50568
R 1683	1	1	MR25	4822 116 51179
R 1684	4,99	1	MR25	5322 116 50568
R 1686	4,99	1	MR25	5322 116 50568
R 1687	4,99	1	MR25	5322 116 50568
R 1688	4,99	1	MR25	5322 116 50568
R 1689	4,99	1	MR25	5322 116 50568
R 1691	4,99	1	MR25	5322 116 50568
R 1692	1	1	MR25	4822 116 51179
R 1693	1	1	MR25	4822 116 51179
R 1694	5,11	1	MR25	5322 116 54192
R 1695	5,11K	1	MR25	5322 116 54595
R 1696	402	1	MR25	5322 116 54519

SEMI CONDUCTORS

POSNR	DESCRIPTION	ORDERING CODE
V 301	BFS21A	5322 130 40709
V 302	BAV45	5322 130 34037
V 303	BF450	4822 130 44237
V 304	BF450	4822 130 44237
V 306	BF450	4822 130 44237
V 307	BF450	4822 130 44237
V 308	BC558B	4822 130 44197
V 312	BC558B	4822 130 44197
V 313	BC548C	4822 130 44196
V 314	BC548C	4822 130 44196
V 316	BF324	4822 130 41448
V 317	BAW62	4822 130 30613
V 318	BAW62	4822 130 30613
V 319	BAW62	4822 130 30613
V 321	BF324	4822 130 41448
V 401	BFS21A	5322 130 40709
V 402	BAV45	5322 130 34037
V 403	BF450	4822 130 44237
V 404	BF450	4822 130 44237
V 406	BF450	4822 130 44237
V 407	BF450	4822 130 44237
V 408	BC558B	4822 130 44197
V 409	BC558B	4822 130 44197
V 411	BC558B	4822 130 44197
V 412	BC558B	4822 130 44197
V 413	BC548C	4822 130 44196
V 414	BC548C	4822 130 44196
V 416	BF324	4822 130 41448
V 417	BAW62	4822 130 30613
V 418	BAW62	4822 130 30613
V 419	BAW62	4822 130 30613
V 501	BC548C	4822 130 44196
V 502	BAW62	4822 130 30613
V 503	BAW62	4822 130 30613
V 504	BC548C	4822 130 44196
V 601	BC558B	4822 130 44197
V 602	BC548C	4822 130 44196
V 603	BC548C	4822 130 44196
V 604	BSV81	5322 130 44041
V 606	BF199	4822 130 44154
V 607	BF199	4822 130 44154
V 608	BF199	4822 130 44154
V 609	BF199	4822 130 44154
V 611	BC548C	4822 130 44196
V 700	BC558B	4822 130 44197
V 702	BF450	4822 130 44237
V 703	BC548C	4822 130 44196
V 704	BF450	4822 130 44237
V 706	BAW62	4822 130 30613
V 707	BAW62	4822 130 30613
V 710	BAW62	4822 130 30613
V 712	OA95	4822 130 30191
V 713	OA95	4822 130 30191
V 714	BAW62	4822 130 30613
V 715	BC548C	4822 130 44196
V 716	BAV45	5322 130 34037
V 717	ON561	5322 130 40709
V 718	BF450	4822 130 44237
V 719	BC548C	4822 130 44196
V 721	BAW62	4822 130 30613
V 722	BAW62	4822 130 30613
V 723	BAW62	4822 130 30613
V 724	BC548C	4822 130 44196
V 726	BAW62	4822 130 30613
V 727	BAW62	4822 130 30613
V 728	BF450	4822 130 44237
V 729	BC548C	4822 130 44196
V 801	BF450	4822 130 44237
V 802	BF199	4822 130 44154
V 803	BC548C	4822 130 44196
V 804	BAW62	4822 130 30613
V 806	BAW62	4822 130 30613
V 807	BAV45	5322 130 34037
V 808	ON561	5322 130 40709
V 809	BC548C	4822 130 44196
V 811	BAW62	4822 130 30613
V 812	BAW62	4822 130 30613
V 813	BAW62	4822 130 30613
V 814	BAW62	4822 130 30613
V 816	BF450	4822 130 44237
V 901	BZV46-C1V5	5322 130 34865
V 902	BAW62	4822 130 30613
V 903	BSX20	5322 130 40417
V 904	BSX20	5322 130 40417
V 905	AAZ18	4822 130 30084
V 906	BC558B	4822 130 44197
V 907	BAW62	4822 130 30613
V 908	BC548C	4822 130 44196
V 909	BC548C	4822 130 44196
V 911	BC548C	4822 130 44196
V 912	BAW62	4822 130 30613
V 913	BC548C	4822 130 44196
V 914	BC548C	4822 130 44196
V 916	BAW62	4822 130 30613
V 917	BC548C	4822 130 44196
V 1001	BC548C	4822 130 44196
V 1002	BC548C	4822 130 44196
V 1003	BC548C	4822 130 44196
V 1004	BC548C	4822 130 44196
V 1006	BC548C	4822 130 44196
V 1007	BC558B	4822 130 44197
V 1008	BAW62	4822 130 30613
V 1009	BAW62	4822 130 30613
V 1010	BC548C	4822 130 44196
V 1011	BC558B	4822 130 44197
V 1012	BSX20	5322 130 40417
V 1013	BC548C	4822 130 44196
V 1014	BC548C	4822 130 44196
V 1016	BAW62	4822 130 30613
V 1017	BC548C	4822 130 44196
V 1018	BC548C	4822 130 44196
V 1019	BAW62	4822 130 30613
V 1021	BC548C	4822 130 44196
V 1101	BAW62	4822 130 30613
V 1102	BAW62	4822 130 30613
V 1103	BAW62	4822 130 30613
V 1104	BC558B	4822 130 44197
V 1106	BZX79-C7V5	4822 130 30861
V 1107	BAW62	4822 130 30613
V 1108	BAW62	4822 130 30613
V 1109	BAW62	4822 130 30613
V 1111	BAW62	4822 130 30613

POSNR	DESCRIPTION	ORDERING CODE
V 1112	BAW62	4822 130 30613
V 1113	BAW62	4822 130 30613
V 1114	BAW62	4822 130 30613
V 1116	BAW62	4822 130 30613
V 1117	BC558B	4822 130 44197
V 1118	BC558B	4822 130 44197
V 1119	BAW62	4822 130 30613
V 1121	BAW62	4822 130 30613
V 1122	BC548C	4822 130 44196
V 1123	BAW62	4822 130 30613
V 1124	BAW62	4822 130 30613
V 1126	BC558B	4822 130 44197
V 1127	BC558B	4822 130 44197
V 1128	BC558B	4822 130 44197
V 1129	BAW62	4822 130 30613
V 1131	BAW62	4822 130 30613
V 1132	BC558B	4822 130 44197
V 1133	BAW62	4822 130 30613
V 1201	BC548C	4822 130 44196
V 1202	BC548C	4822 130 44196
V 1203	BF199	4822 130 44154
V 1204	BF199	4822 130 44154
V 1206	BSV81	5322 130 44041
V 1207	BZX79-C22	4822 130 34441
V 1208	BFT45	5322 130 44603
V 1209	BZX79-C22	4822 130 34441
V 1211	BZX79-C47	4822 130 34383
V 1212	BF338	4822 130 44108
V 1213	BFQ22	5322 130 41709
V 1214	BAW62	4822 130 30613
V 1216	BF450	4822 130 44237
V 1217	BFT45	5322 130 44603
V 1218	BZX79-C39	4822 130 34145
V 1219	BZX79-C56	4822 130 34258
V 1221	BF338	4822 130 44108
V 1222	BZX79-C22	4822 130 34441
V 1300	BAW62	4822 130 30613
V 1301	BAW62	4822 130 30613
V 1302	BC548C	4822 130 44196
V 1303	BC548C	4822 130 44196
V 1304	BAW62	4822 130 30613
V 1306	BAW62	4822 130 30613
V 1307	BAW62	4822 130 30613
V 1308	BAW62	4822 130 30613
V 1309	BC558B	4822 130 44197
V 1311	BAW62	4822 130 30613
V 1312	BC558B	4822 130 44197
V 1313	BAW62	4822 130 30613
V 1314	BC548C	4822 130 44196
V 1315	BC548C	4822 130 44196
V 1317	BAW62	4822 130 30613
V 1318	BC548C	4822 130 44196
V 1319	BF422	4822 130 41544
V 1321	BAV21	4822 130 30842
V 1322	BAV21	4822 130 30842
V 1323	BF422	4822 130 41544
V 1324	BF422	4822 130 41544
V 1326	BAV21	4822 130 30842
V 1327	BAW62	4822 130 30613
V 1328	BAW62	4822 130 30613
V 1329	BF422	4822 130 41544
V 1330	BAW62	4822 130 30613
V 1331	BC548C	4822 130 44196
V 1332	BZV46-C1V5	5322 130 34865
V 1333	BAW62	4822 130 30613
V 1334	BC548C	4822 130 44196
V 1335	BAW62	4822 130 30613
V 1336	BAW62	4822 130 30613
V 1337	BAW62	4822 130 30613
V 1338	BC558B	4822 130 44197
V 1339	BC547B	4822 130 40959
V 1341	BAW62	4822 130 30613
V 1342	BSX20	5322 130 40417
V 1343	BC558B	4822 130 44197
V 1344	BZV46-C1V5	5322 130 34865
V 1346	BC558B	4822 130 44197
V 1347	BC557B	4822 130 44568
V 1348	BC557B	4822 130 44568
V 1349	BC547B	4822 130 40959
V 1351	BC548C	4822 130 44196
V 1352	BF422	4822 130 41544
V 1353	BF422	4822 130 41544
V 1354	BF422	4822 130 41544
V 1356	BF422	4822 130 41544
V 1357	BAV21	4822 130 30842
V 1358	BAV21	4822 130 30842
V 1361	BC548C	4822 130 44196
V 1362	BZV46-C1V5	5322 130 34865
V 1363	BC548C	4822 130 44196
V 1364	BF422	4822 130 41544
V 1365	BZV46-C1V5	5322 130 34865
V 1366	BZX79-B10	4822 130 34297
V 1367	BC548C	4822 130 44196
V 1368	BC548C	4822 130 44196
V 1369	BF423	4822 130 41646
V 1371	BAV21	4822 130 30842
V 1372	BAV21	4822 130 30842
V 1373	BSX20	5322 130 40417
V 1374	BZV46-C1V5	5322 130 34865
V 1376	BC548C	4822 130 44196
V 1377	BZV46-C1V5	5322 130 34865
V 1378	BAW62	4822 130 30613
V 1379	BAW62	4822 130 30613
V 1381	BAW62	4822 130 30613
V 1382	BAW62	4822 130 30613
V 1383	BF422	4822 130 41544
V 1384	BZV10	5322 130 34439
V 1386	BZV10	5322 130 34439
V 1501	OA95	4822 130 30191
V 1502	BAW62	4822 130 30613
V 1503	BC548C	4822 130 44196
V 1504	BAW62	4822 130 30613
V 1506	BAW62	4822 130 30613
V 1507	BAW62	4822 130 30613
V 1508	BC548C	4822 130 44196
V 1509	BAW62	4822 130 30613
V 1511	BAW62	4822 130 30613
V 1512	BAW62	4822 130 30613
V 1513	BAW62	4822 130 30613
V 1514	BC548C	4822 130 44196
V 1516	BAW62	4822 130 30613
V 1517	BF199	4822 130 44154
V 1518	BF199	4822 130 44154
V 1519	BZV46-C1V5	5322 130 34865
V 1521	BSS38	4822 130 40968
V 1522	BC548C	4822 130 44196
V 1523	BSS68	5322 130 44247
V 1524	BAV21	4822 130 30842
V 1526	BAV21	4822 130 30842
V 1527	BC548C	4822 130 44196

POSNR	DESCRIPTION	ORDERING CODE
V 1528	BC558B	4822 130 44197
V 1529	BZX79-C33	4822 130 34142
V 1531	BC558B	4822 130 44197
V 1532	BZV10	5322 130 34439
V 1601	BC558B	4822 130 44197
V 1602	BC548C	4822 130 44196
V 1603	BAW62	4822 130 30613
V 1604	BAW62	4822 130 30613
V 1606	BYX49-900	5322 130 34558
V 1607	BY225-200	4822 130 50312
V 1608	BAW62	4822 130 30613
V 1609	BYW29-150	5322 130 34711
V 1612	BAX12A	5322 130 34605
V 1614	BZX79-B5V6	4822 130 34173
V 1616	BC548C	4822 130 44196
V 1617	BC548C	4822 130 44196
V 1618	BC547B	4822 130 40959
V 1619	BC547B	4822 130 40959
V 1621	BAW62	4822 130 30613
V 1622	BAW62	4822 130 30613
V 1623	BDX77 (TO220)	5322 130 44553
V 1624	BAX12A	5322 130 34605
V 1626	BAX12A	5322 130 34605
V 1627	BDX77 (TO220)	5322 130 44553
V 1628	BAX12A	5322 130 34605
V 1629	BAW62	4822 130 30613
V 1631	BAW62	4822 130 30613
V 1633	BY509	4822 130 41485
V 1634	BY509	4822 130 41485
V 1636	BY509	4822 130 41485
V 1637	BY509	4822 130 41485
V 1638	BY509	4822 130 41485
V 1639	BZX79-C75	4822 130 34685
V 1640	BZX79-C56	4822 130 34258
V 1641	BF422	4822 130 41544
V 1642	BYV96D	4822 130 31348
V 1643	BYV96D	4822 130 31348
V 1644	BAX12A	5322 130 34605
V 1646	BAX12A	5322 130 34605
V 1647	BAW62	4822 130 30613
V 1648	BAX12A	5322 130 34605
V 1649	BAX12A	5322 130 34605
V 1651	BAX12A	5322 130 34605
V 1652	BAX12A	5322 130 34605
V 1653	BAW62	4822 130 30613
V 1654	BAV21	4822 130 30842
V 1656	BAV21	4822 130 30842
V 1657	BAX12A	5322 130 34605
V 1658	BAX12A	5322 130 34605
V 1659	BAX12A	5322 130 34605
V 1661	BAX12A	5322 130 34605
V 1663	BAW62	4822 130 30613
V 421	BF324	4822 130 41448

INTEGRATED CIRCUITS

POSNR	DESCRIPTION	ORDERING CODE
D 301	SL3145E	5322 130 34854
D 401	SL3145E	5322 130 34854
D 601	SL3145E	5322 130 34854
D 701	CA3086	5322 209 84111
D 801	CA3086	5322 209 84111
D 901	N74LS132N	5322 209 85201
D 902	N74LS132N	5322 209 85201
D 903	N74LS02N	5322 209 85312
D 904	N74S86N	5322 209 85452
D 906	SN74LS109N-00	5322 209 85974
D 907	SN74S74N-00	5322 209 84183
D 908	N74122N	5322 209 84231
D 909	N74S10N	5322 209 84954
D 911	N74LS10N	5322 209 84996
D 1001	N74LS132N	5322 209 85201
D 1002	N74S00N	5322 209 84167
D 1301	N74LS132N	5322 209 85201
D 1302	N74LS74AN	5322 209 84986
D 1303	N74LS132N	5322 209 85201
D 1304	N74LS10N	5322 209 84996
D 1306	N74LS08N	5322 209 84995
D 1307	NE558N	4822 209 80571
D 1308	N74LS33N	5322 209 86039
D 1309	LM339AN	4822 209 80631
D 1501	UA741CN	4822 209 80617
D 1601	TDA1060	5322 209 85662
D 1602	N74LS02N	5322 209 85312
D 1603	N74LS74AN	5322 209 84986
D 1604	UA741CN	4822 209 80617

MISCELLANEOUS

POSNR	DESCRIPTION	ORDERING CODE
B 1	CQY54/III	5322 130 34875
B 2	CQY54/III	5322 130 34875
B 3	CQY54/III	5322 130 34875
F 1601	500 MAT	4822 253 30017
F 1602	T2A	4822 253 30025
F 1603	T2A	4822 253 30025
K 301	REED-RELAIS	5322 280 24131
K 401	REED-RELAIS	5322 280 24131
K 1201	REED-RELAIS	5322 280 24131
L 601	COIL	5322 156 14074
L 602	COIL	5322 156 14074
L 1601	COIL	5322 281 64154
L 1602	COIL	5322 281 64154
L 1603	COIL	5322 281 64154
S 1		5322 276 40277
S 2		5322 276 50285
S 3		5322 276 80228
S 6		5322 273 74011
S 8		5322 273 74011
S 26		5322 276 20285
S 28		5322 276 20285
S 30		5322 276 80226
S 33		5322 263 40045
Supply unit		5322 219 80276
Multiplier		5322 219 80277
Storage unit		5322 216 51004
Focus driver unit		5322 216 51005
Delay line		5322 320 40066
Attenuator switch complete		5322 105 30137
MTB switch complete		5322 105 30135
DTB switch complete		5322 105 30136
Voltage selector		5322 263 40045
Line cord		4822 321 10084

8. CIRCUIT DIAGRAMS AND P.C.B.'s

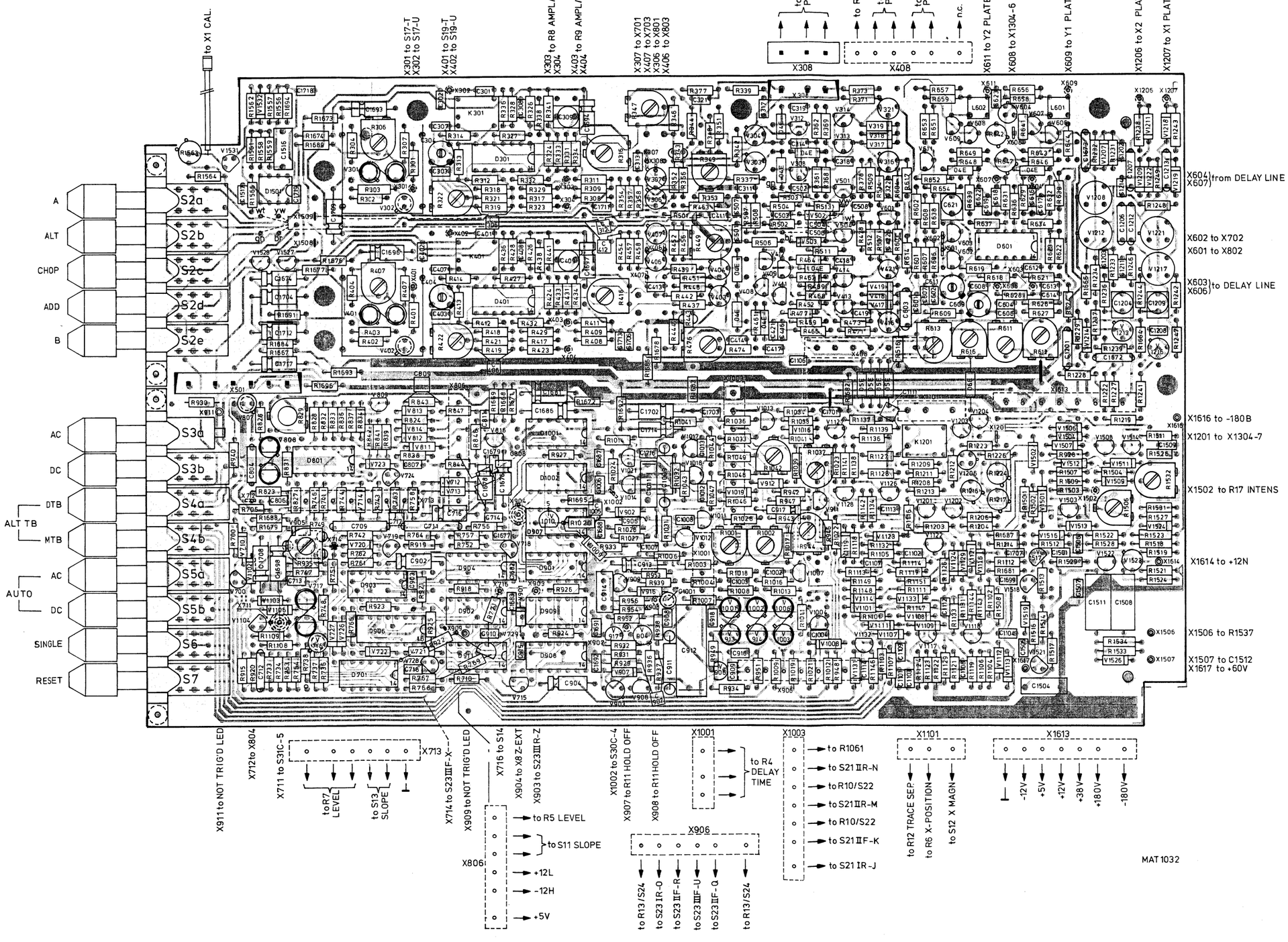

Fig. 8.1. Amplifier Unit

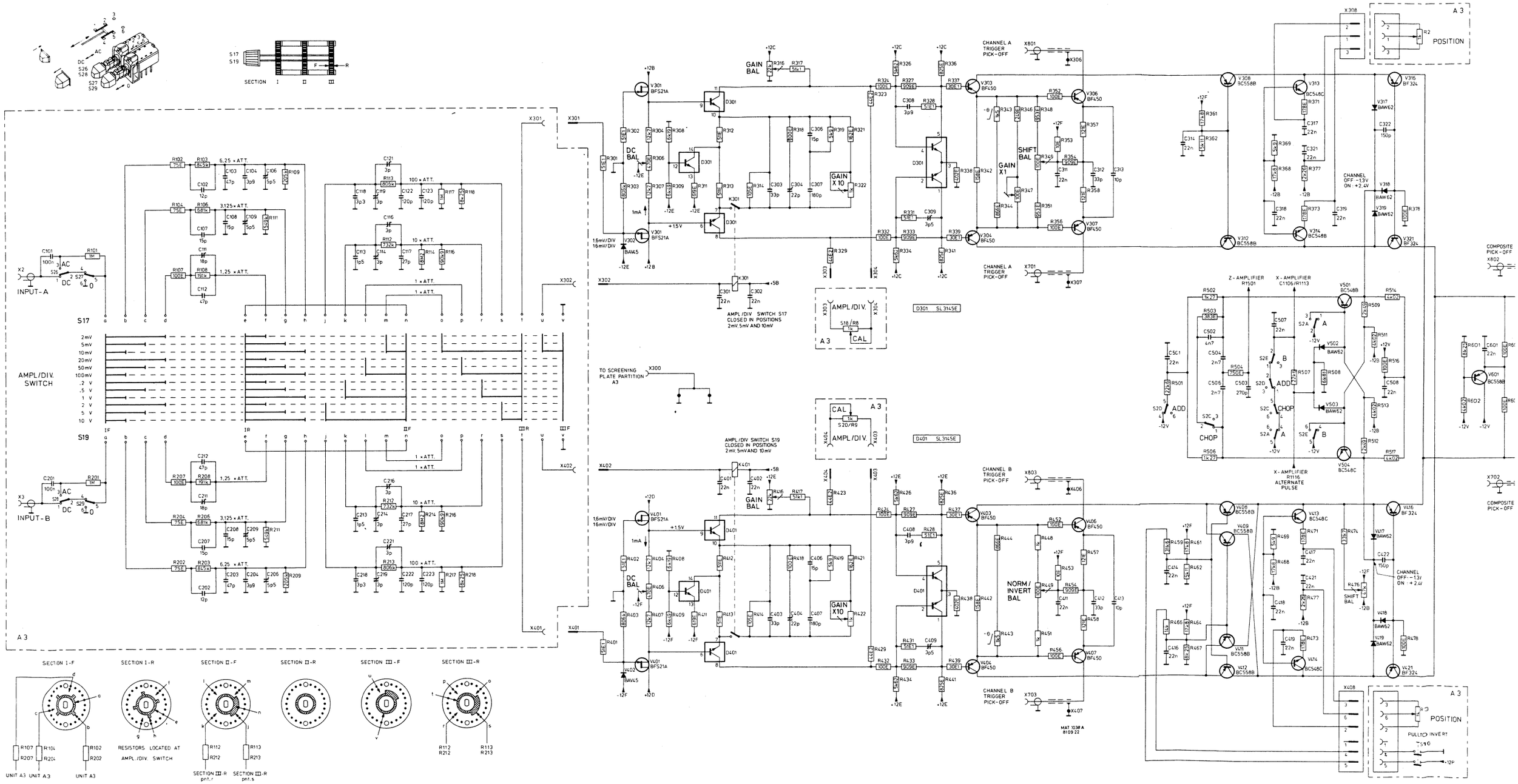

INPUT-A
INPUT-B
AMPL/DIV. SWITCH
S17
S19
SECTION I
SECTION II
SECTION III
GAIN BAL
DC BAL
GAIN X10
AMPL/DIV. SWITCH S17 CLOSED IN POSITIONS 2mV, 5mV AND 10mV
AMPL/DIV. SWITCH S19 CLOSED IN POSITIONS 2mV, 5mV AND 10mV
TO SCREENING PLATE PARTITION A3
CHANNEL A TRIGGER PICK-OFF
CHANNEL B TRIGGER PICK-OFF
SHIFT BAL
GAIN X1
NORM/INVERT BAL
POSITION
PULL TO INVERT
Z-AMPLIFIER R1501
X-AMPLIFIER C1106/R1113
X-AMPLIFIER R1116 ALTERNATE PULSE
ADD
CHOP
COMPOSITE PICK-OFF
CHANNEL OFF: -1.3V ON: +2.4V
D301 SL3145E
D401 SL3145E
MAT 1038 A 8109 22
SECTION I-F
SECTION I-R
SECTION II-F
SECTION II-R
SECTION III-F
SECTION III-R
RESISTORS LOCATED AT AMPL./DIV. SWITCH
UNIT A3

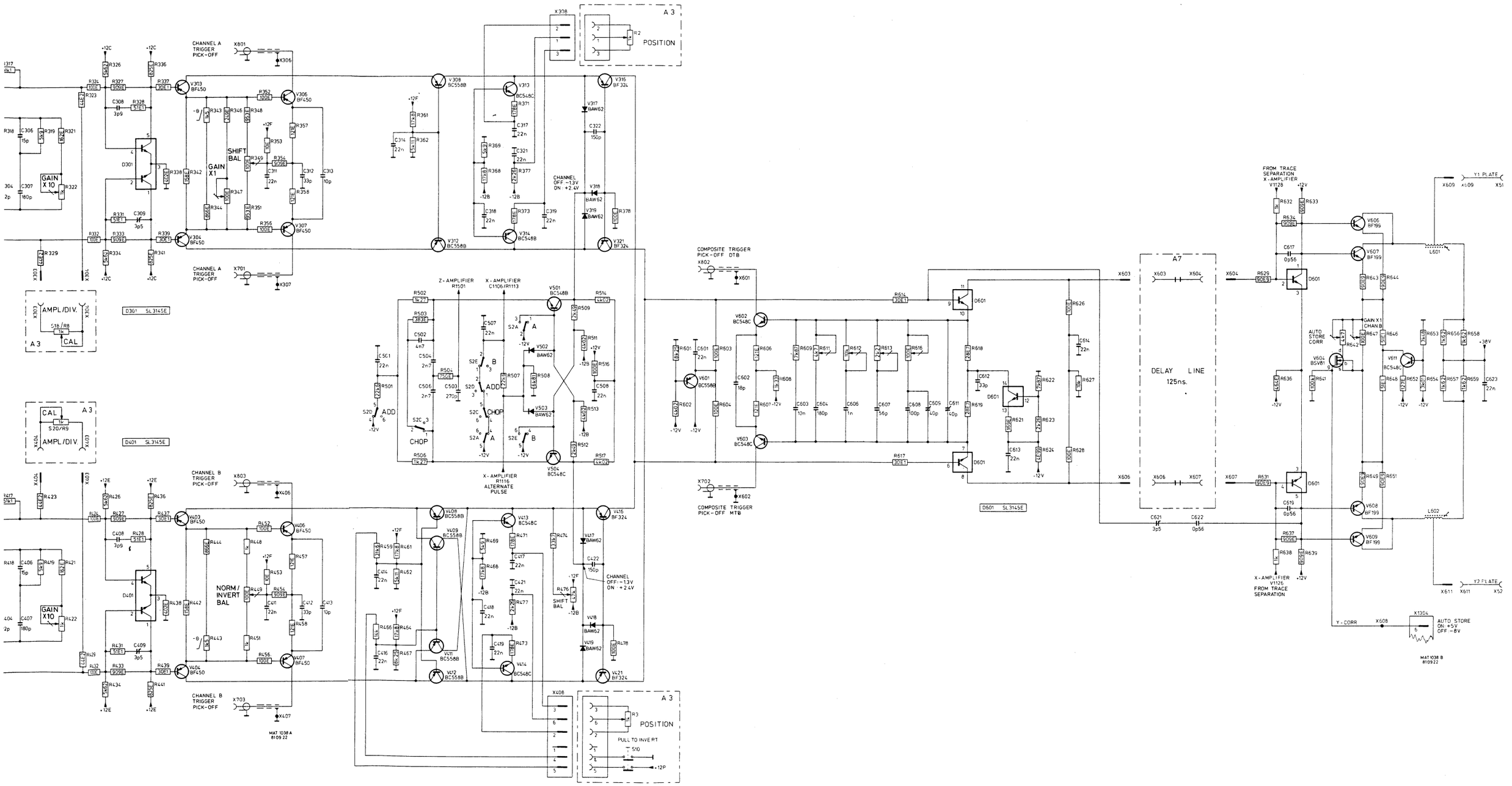

Fig. 8.2. Y-channel

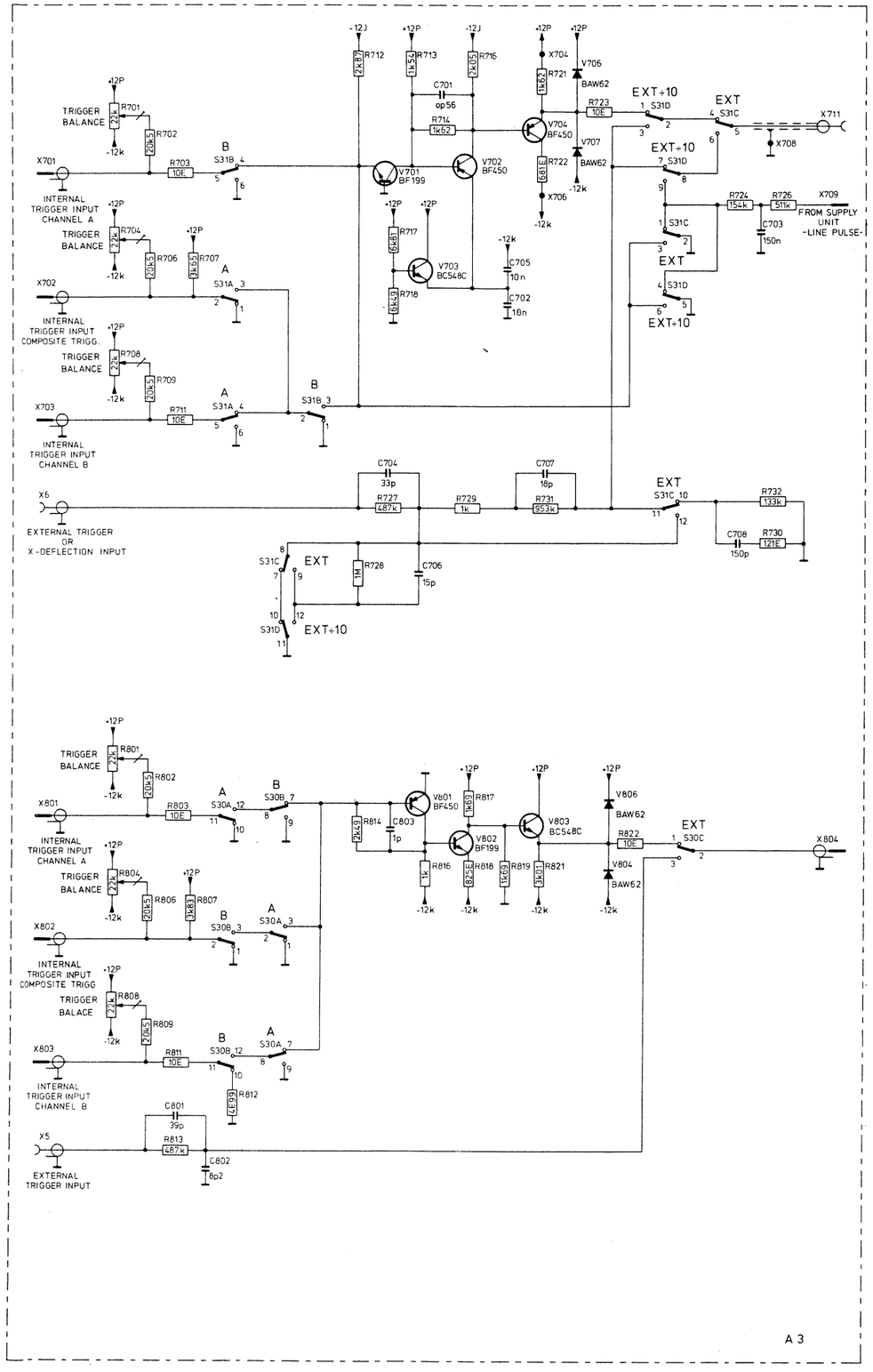

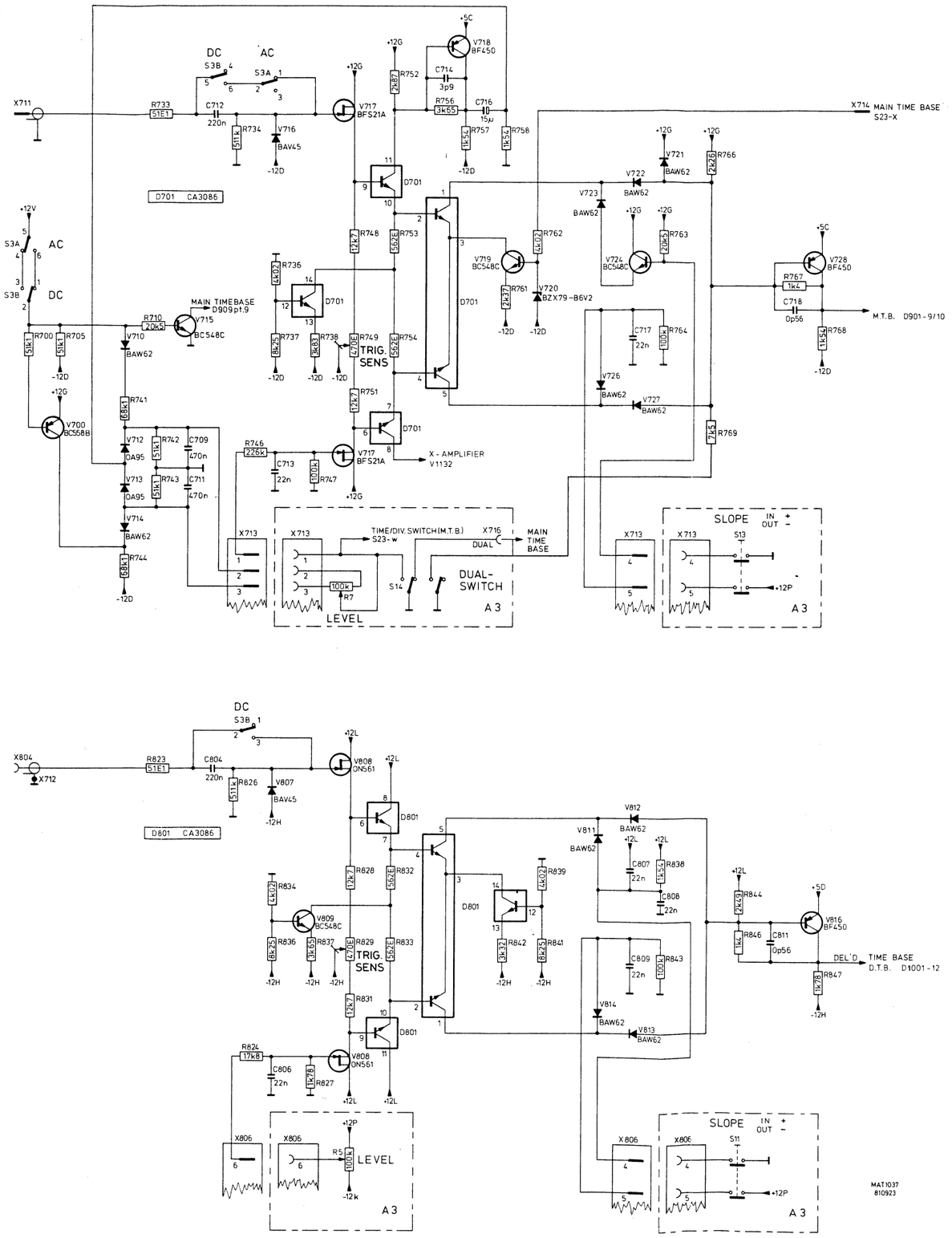

Fig. 8.3. Trigger selection M.T.B. + D.T.B.

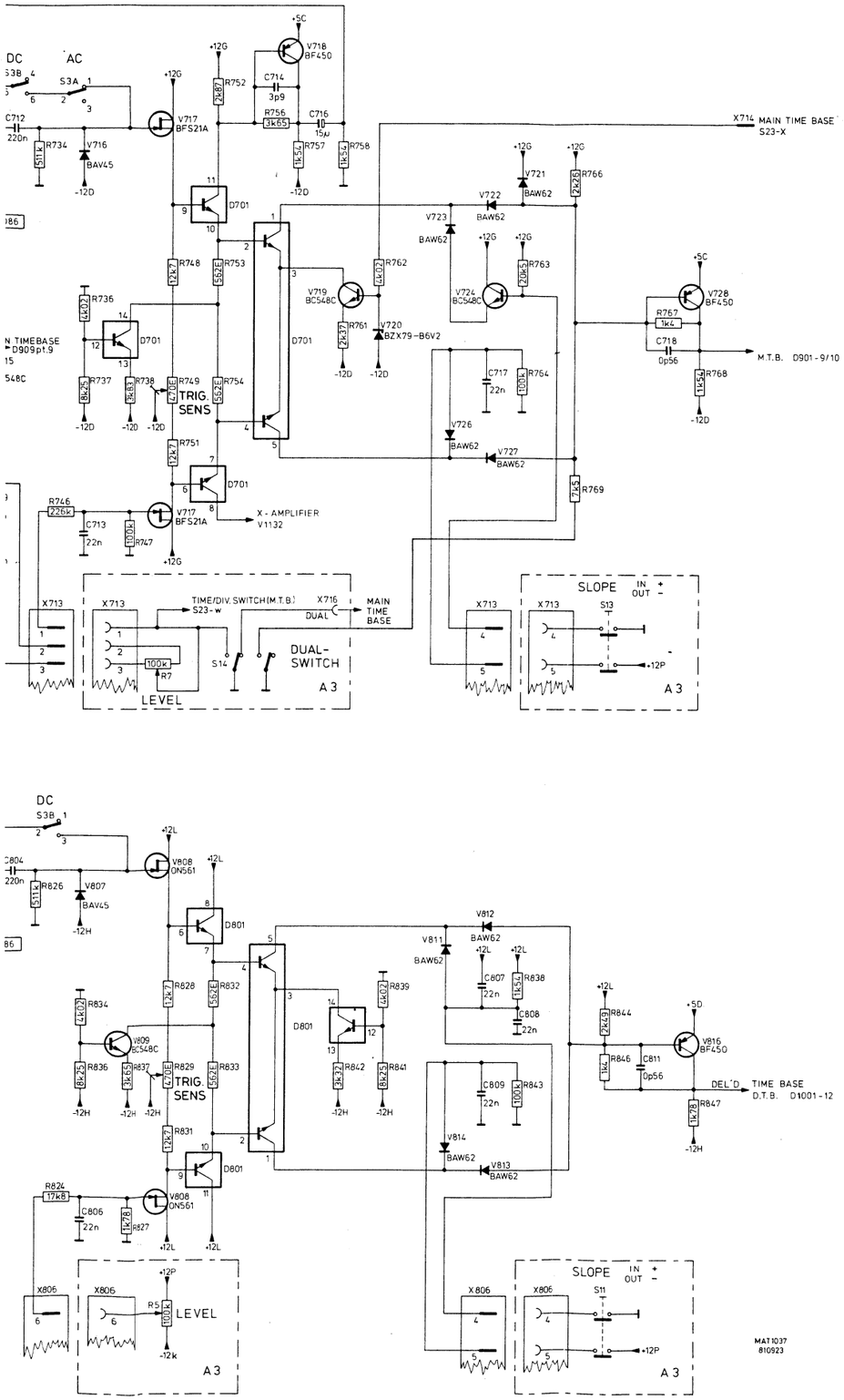

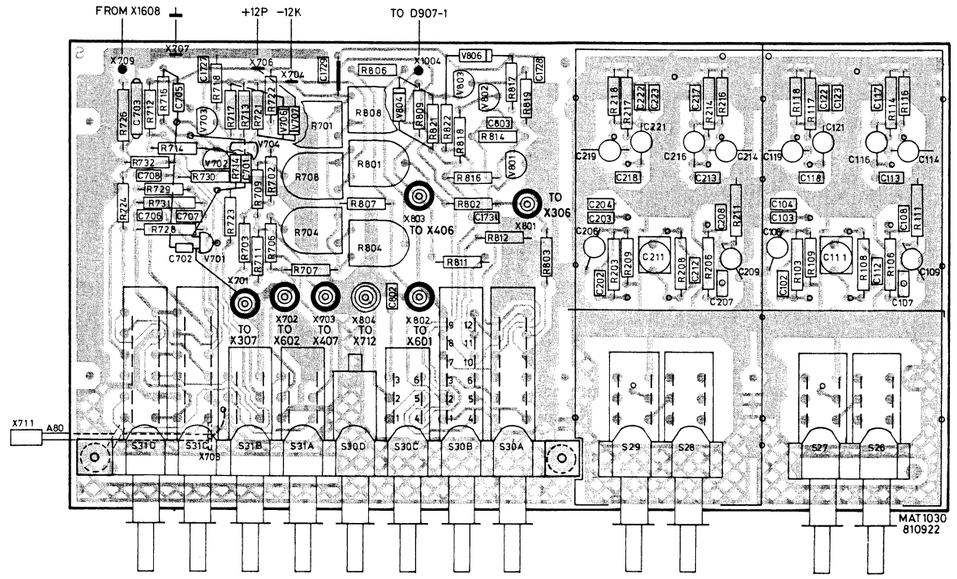

Fig. 8.4. Trigger Selection

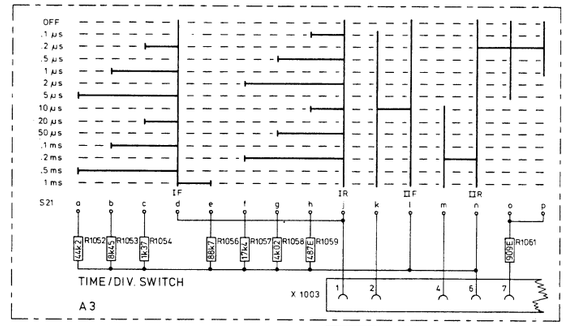

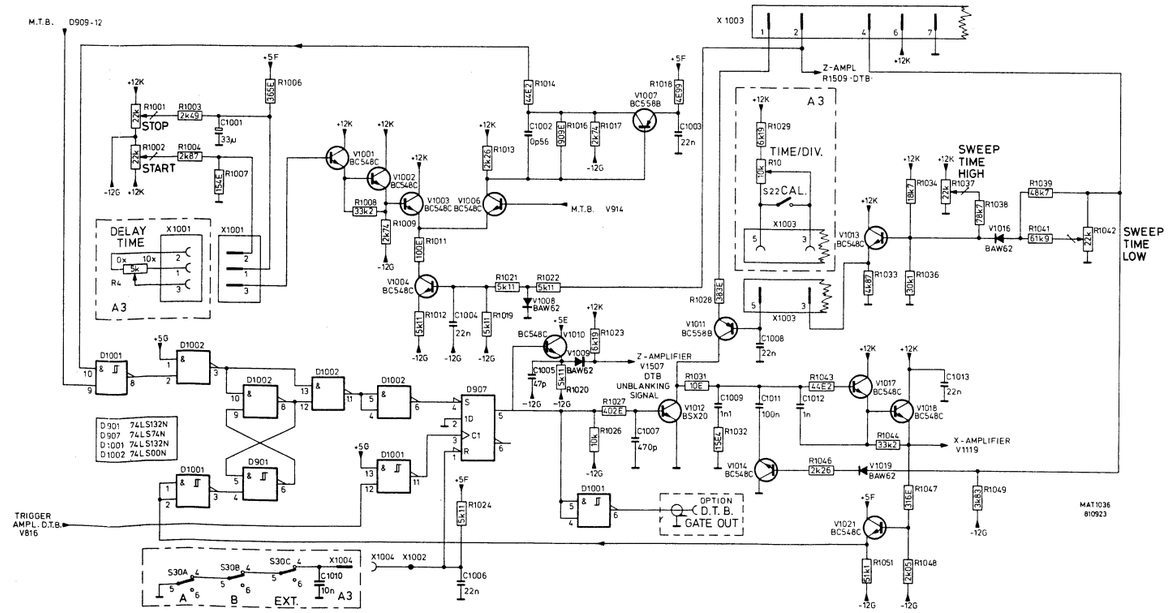

Fig. 8.5. Delayed time base

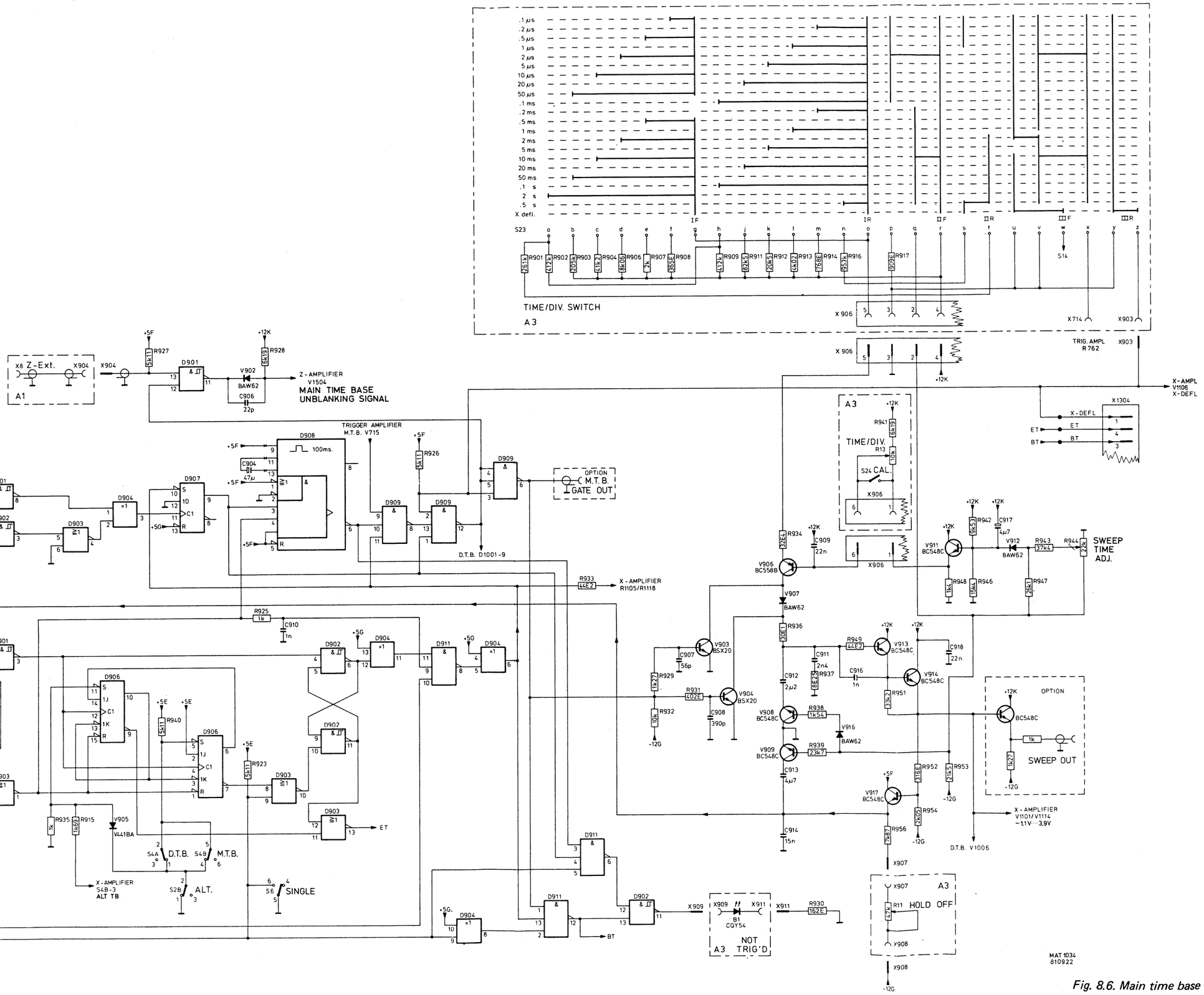

Fig. 8.6. Main time base

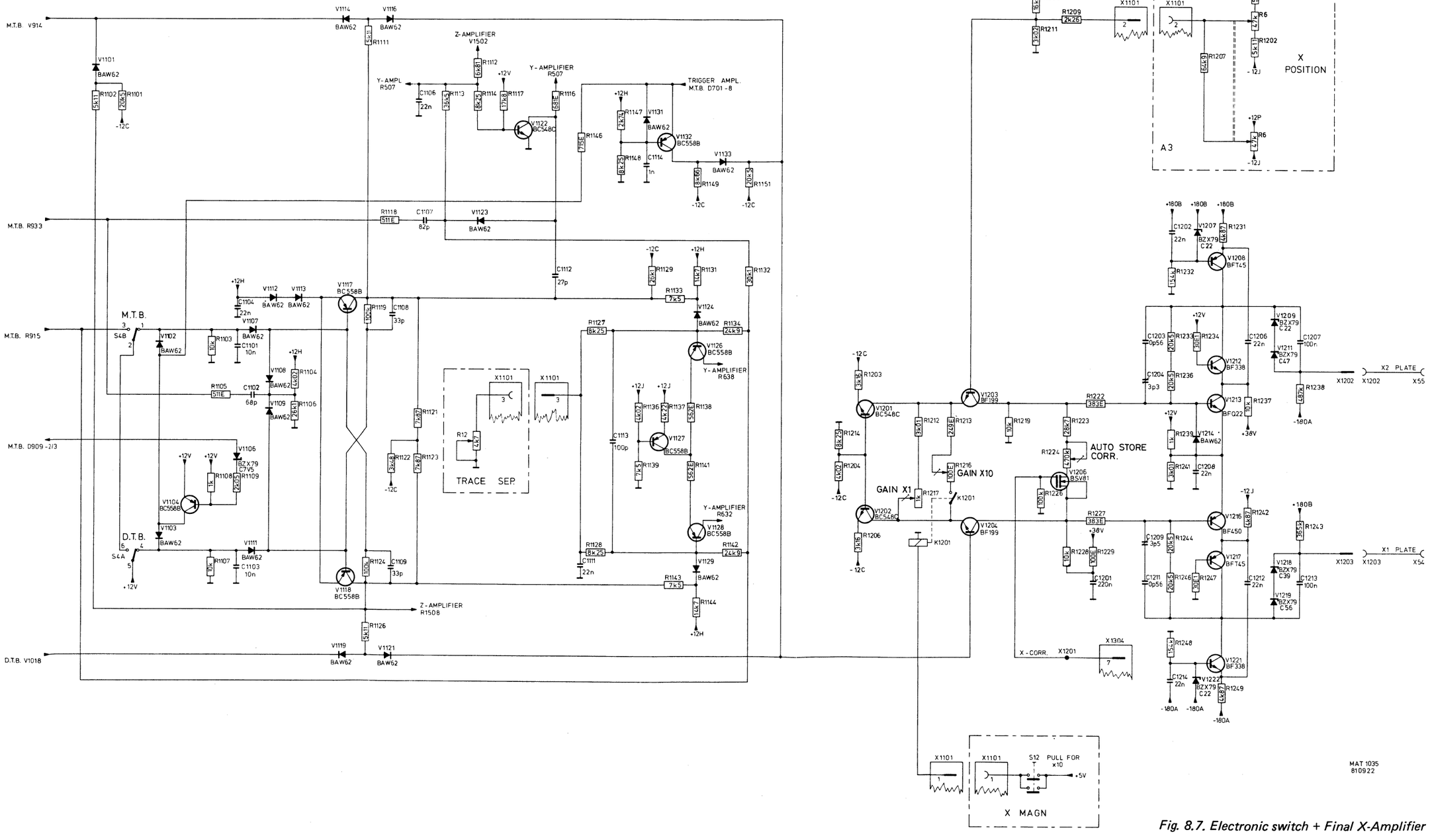

Fig. 8.7. Electronic switch + Final X-Amplifier

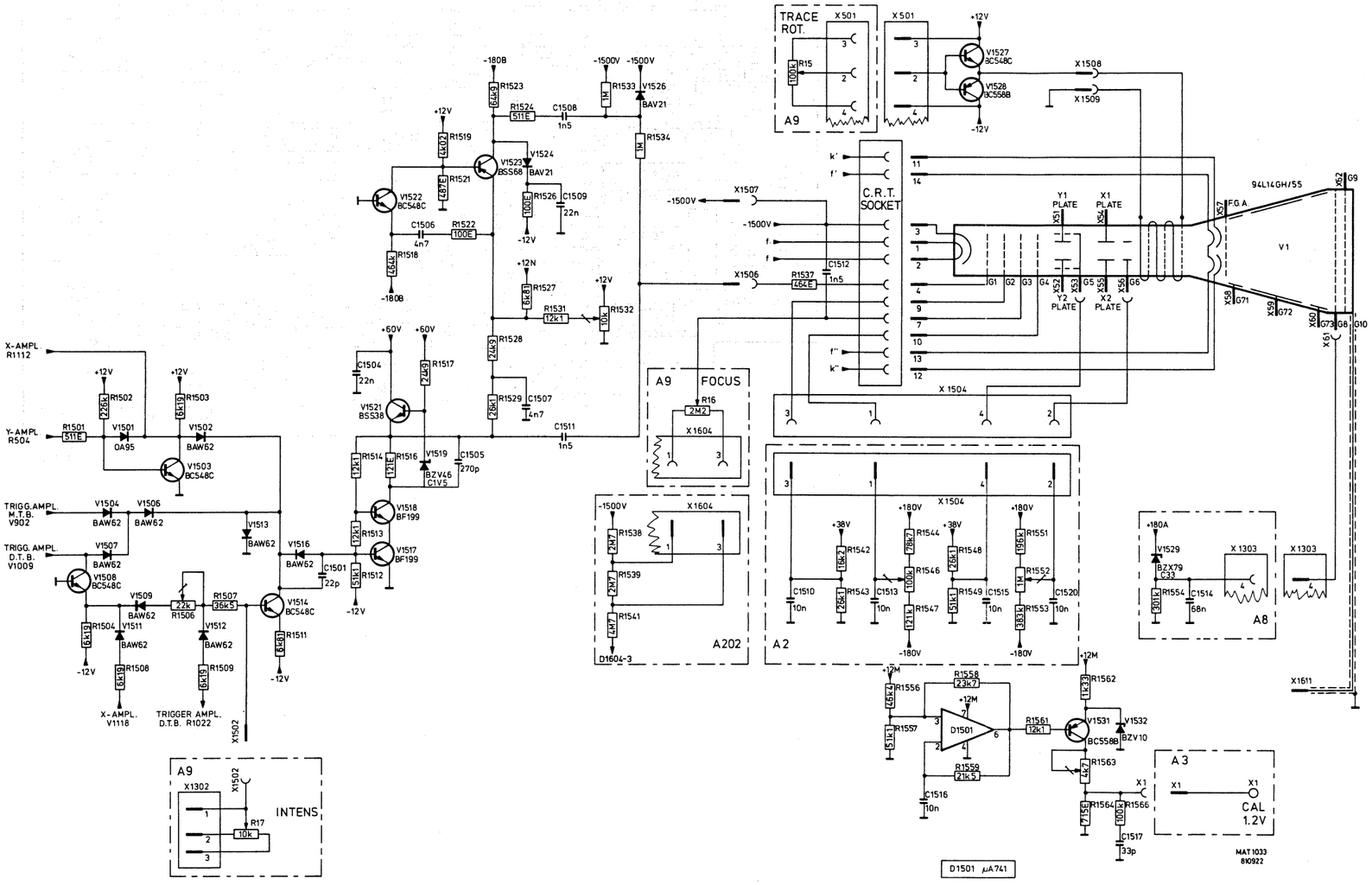

Fig. 8.8. Z-Amplifier

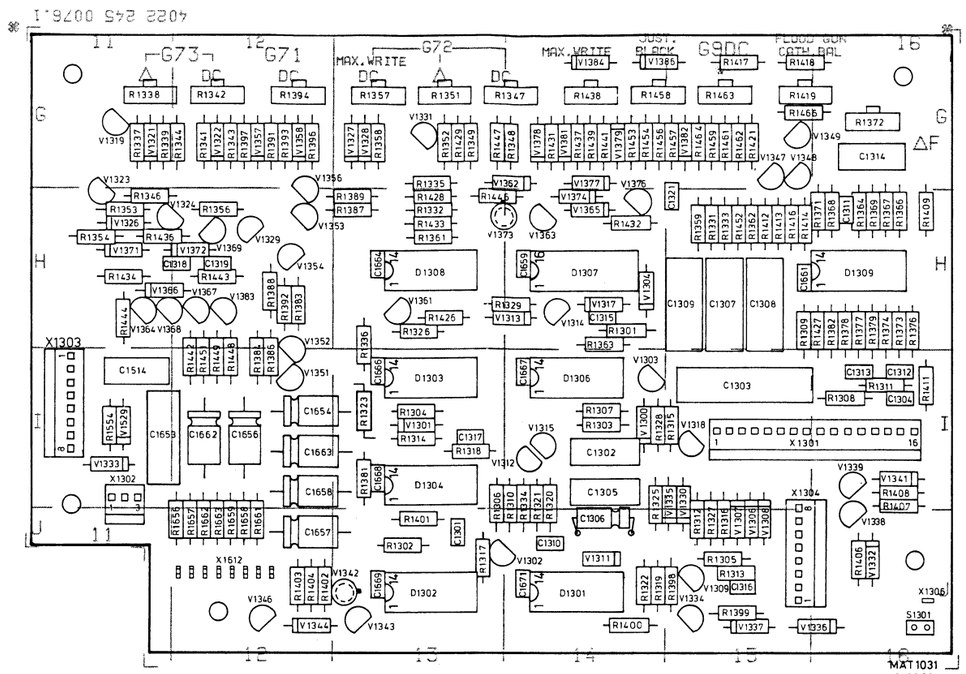

Fig. 8.9. PCB Storage Unit

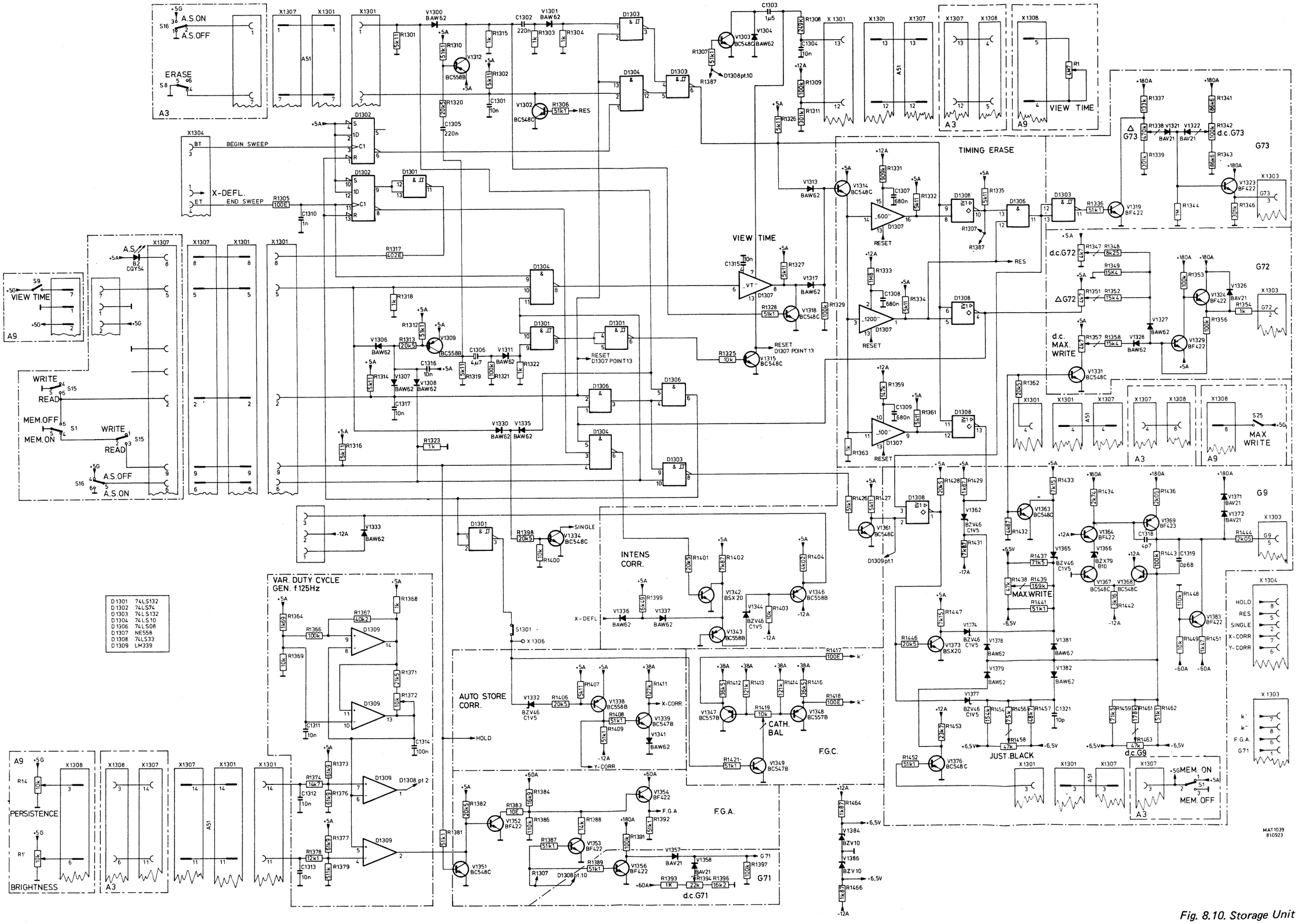

D1301	74LS132
D1302	74LS74
D1303	74LS132
D1304	74LS10
D1306	74LS08
D1307	NE558
D1308	74LS33
D1309	LM339

Fig. 8.10. Storage Unit

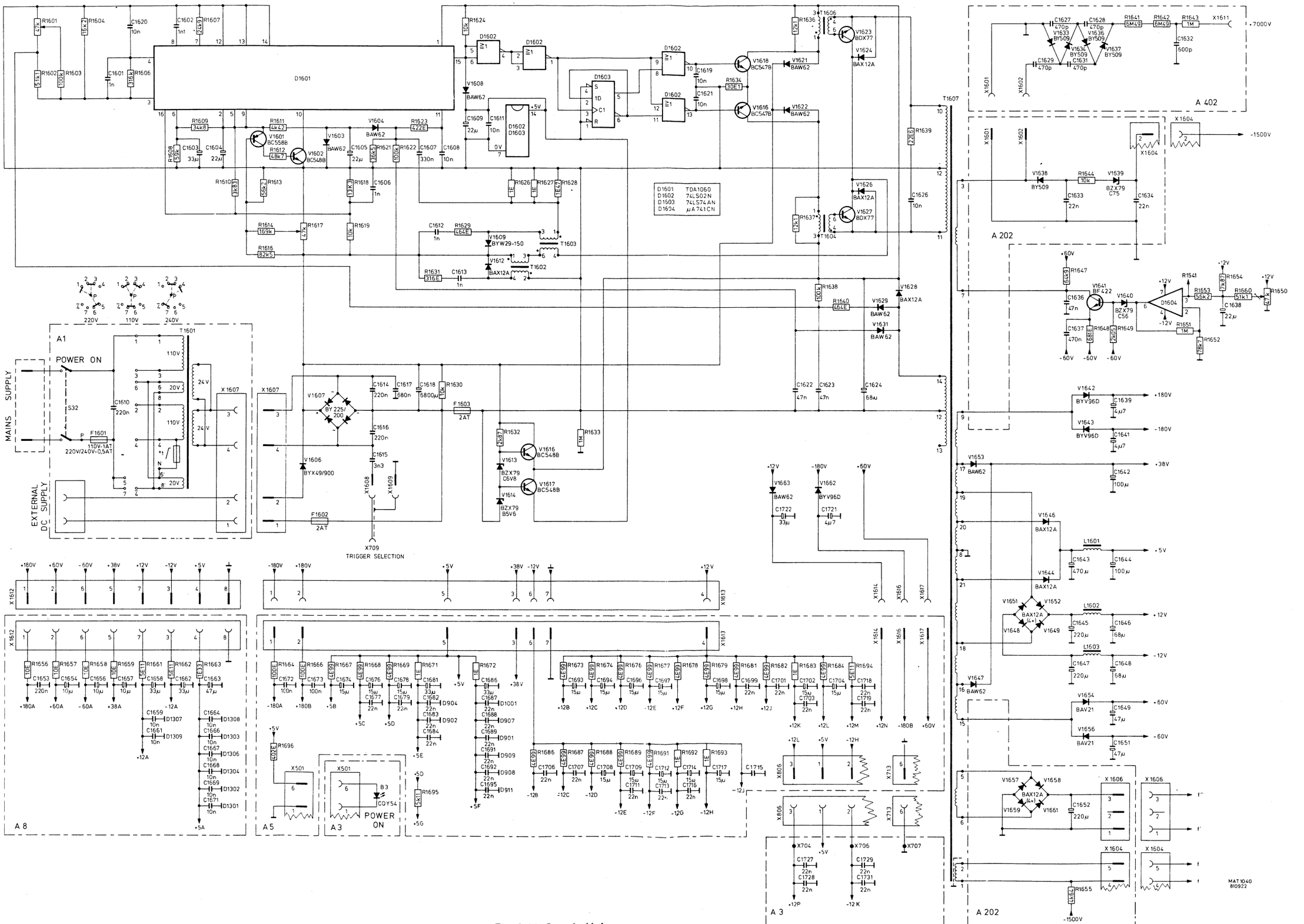

Fig. 8.11. Supply Unit

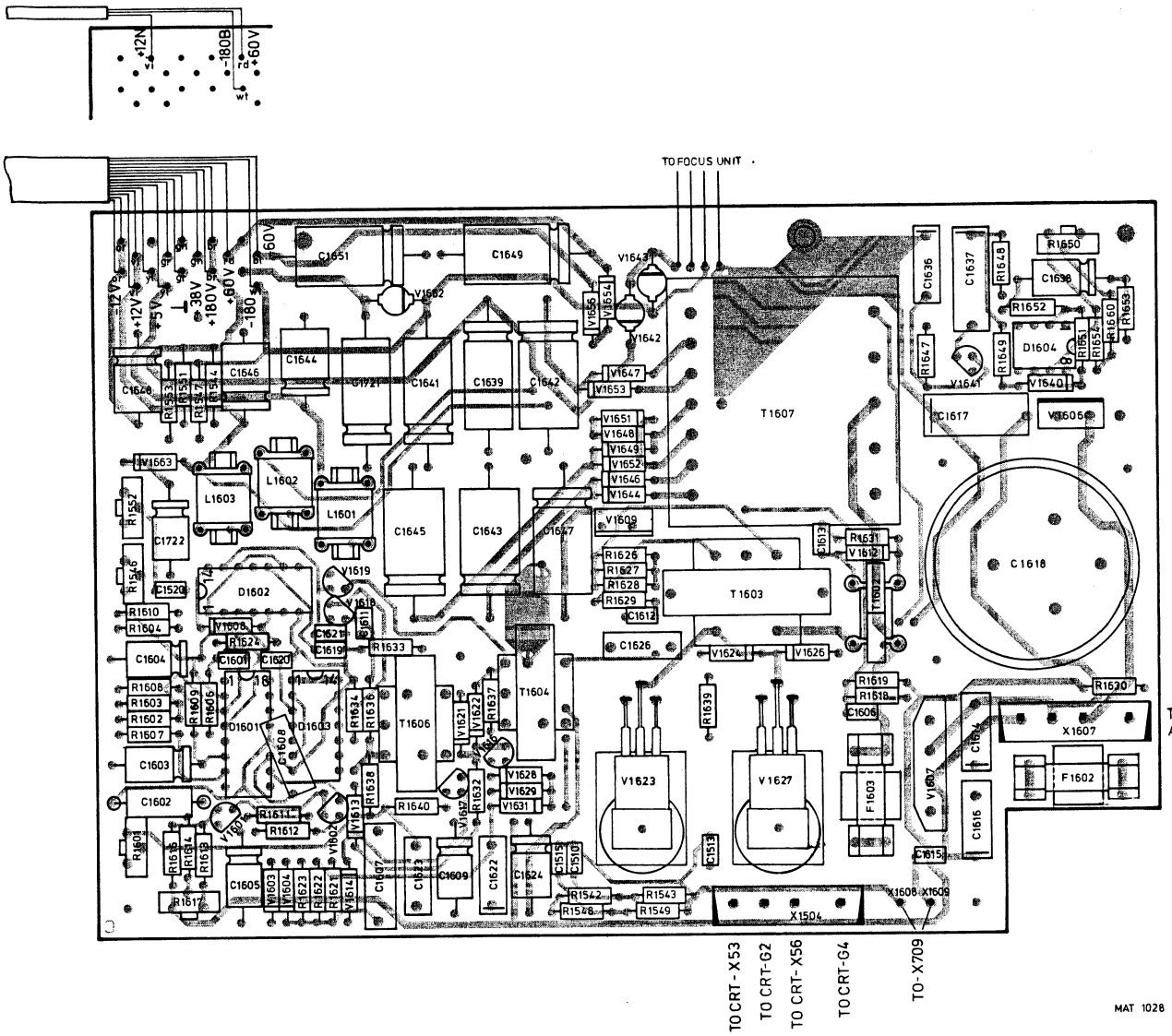

Fig. 8.12. PCB Supply Unit

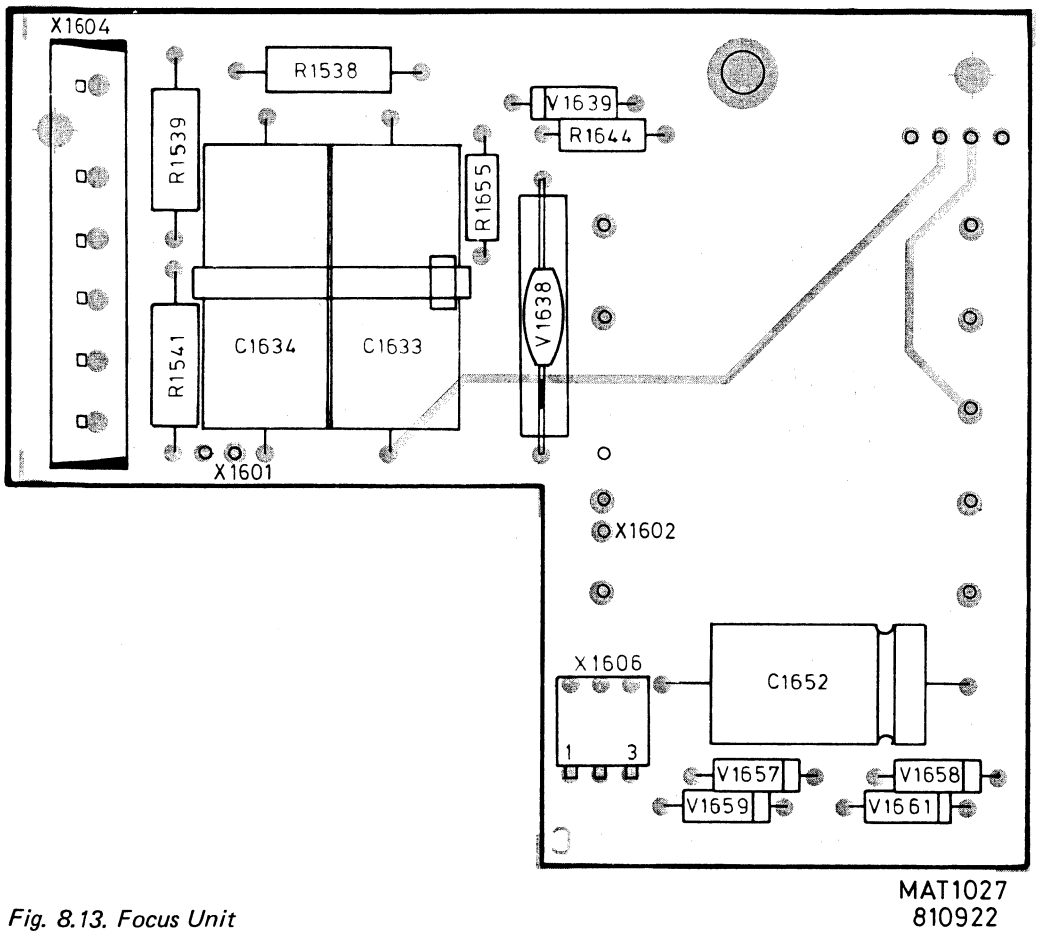

Fig. 8.13. Focus Unit

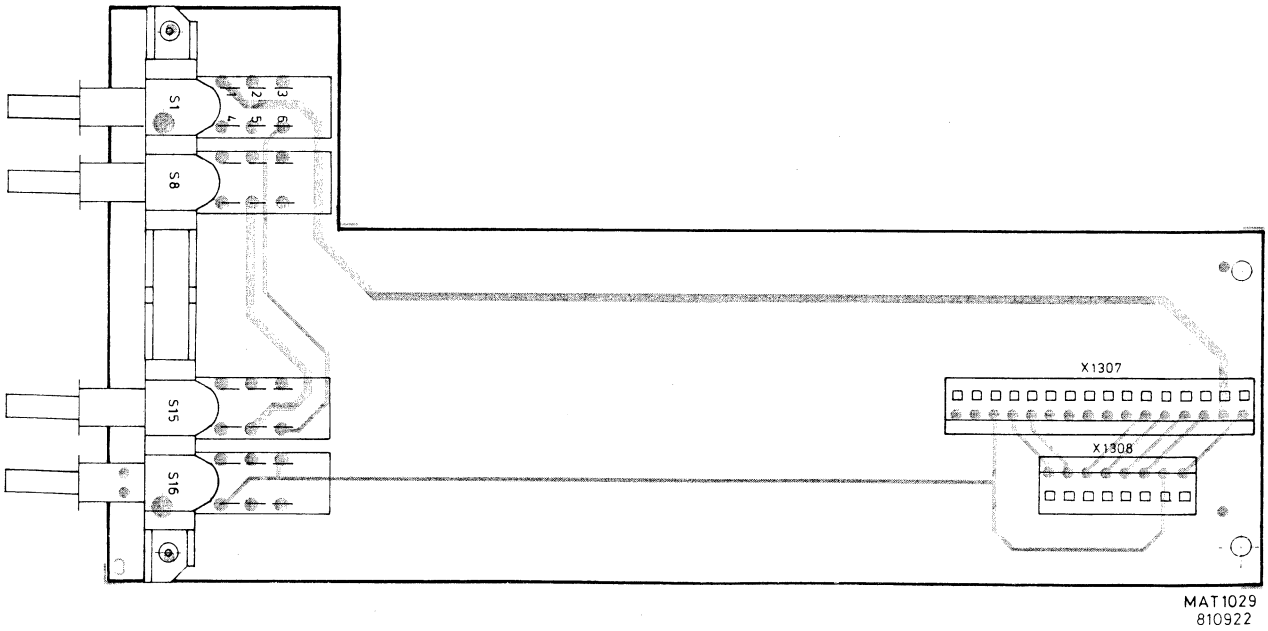

Fig. 8.14. Storage control Unit

9. WIRING DIAGRAMS

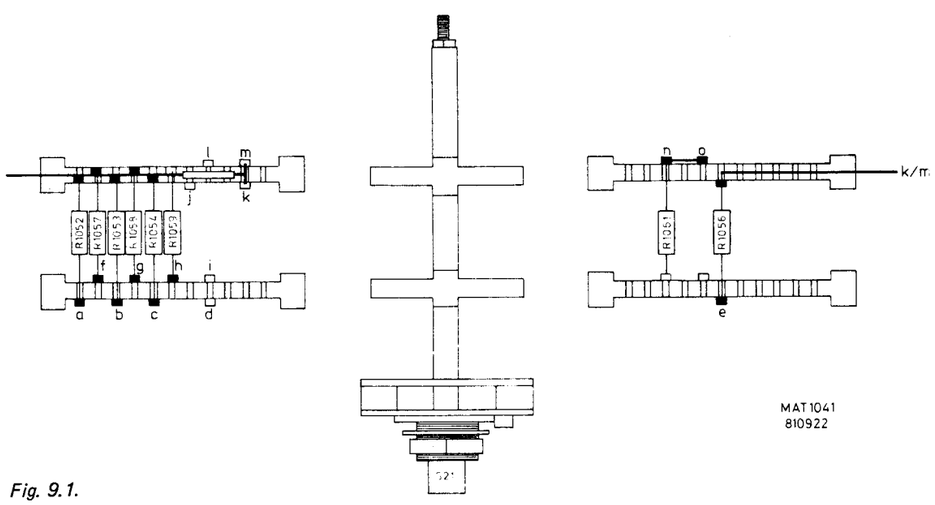

Fig. 9.1.

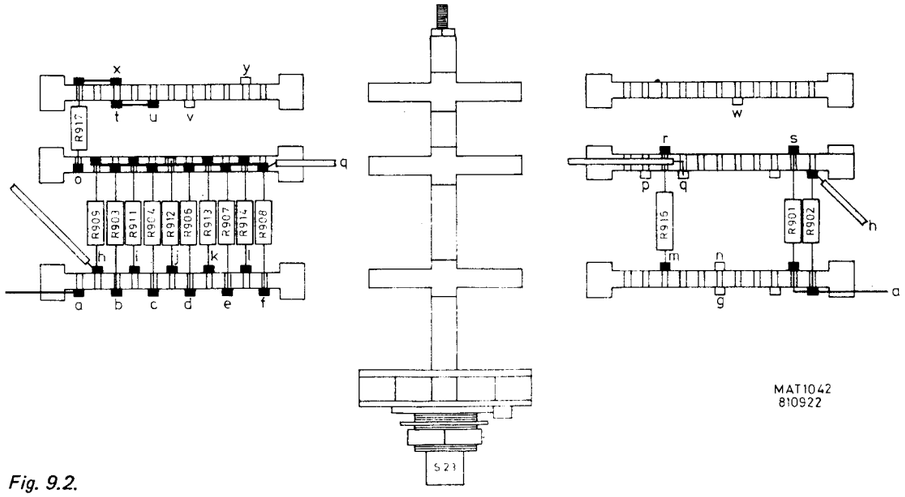

Fig. 9.2.

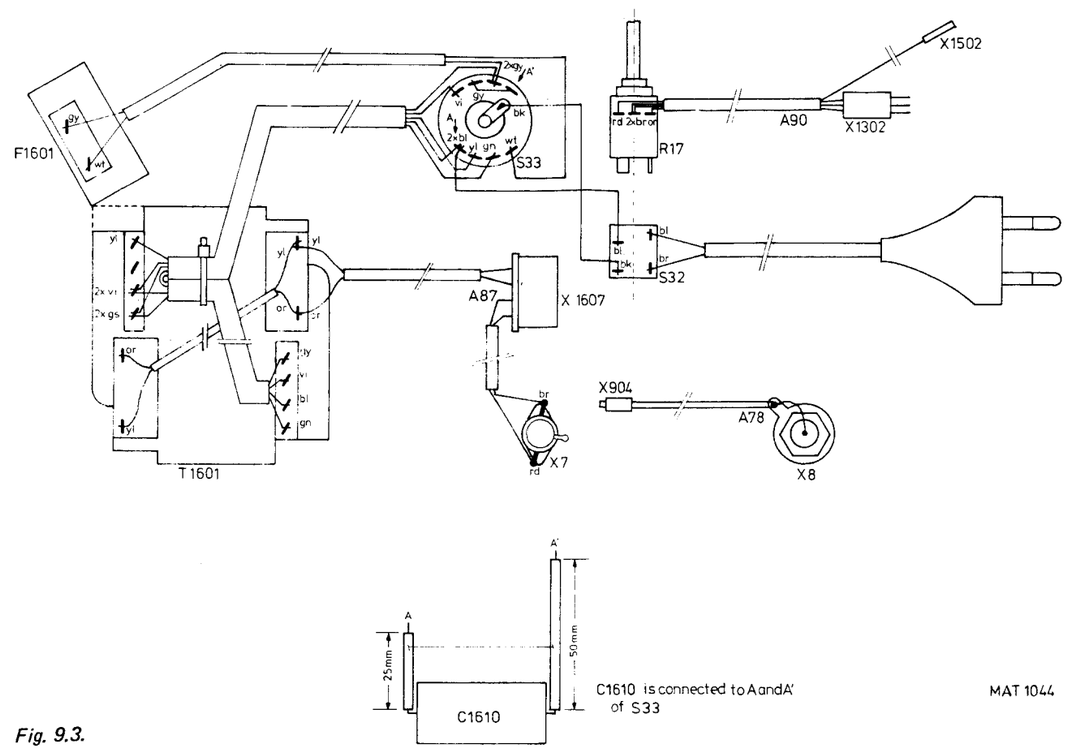

Fig. 9.3.

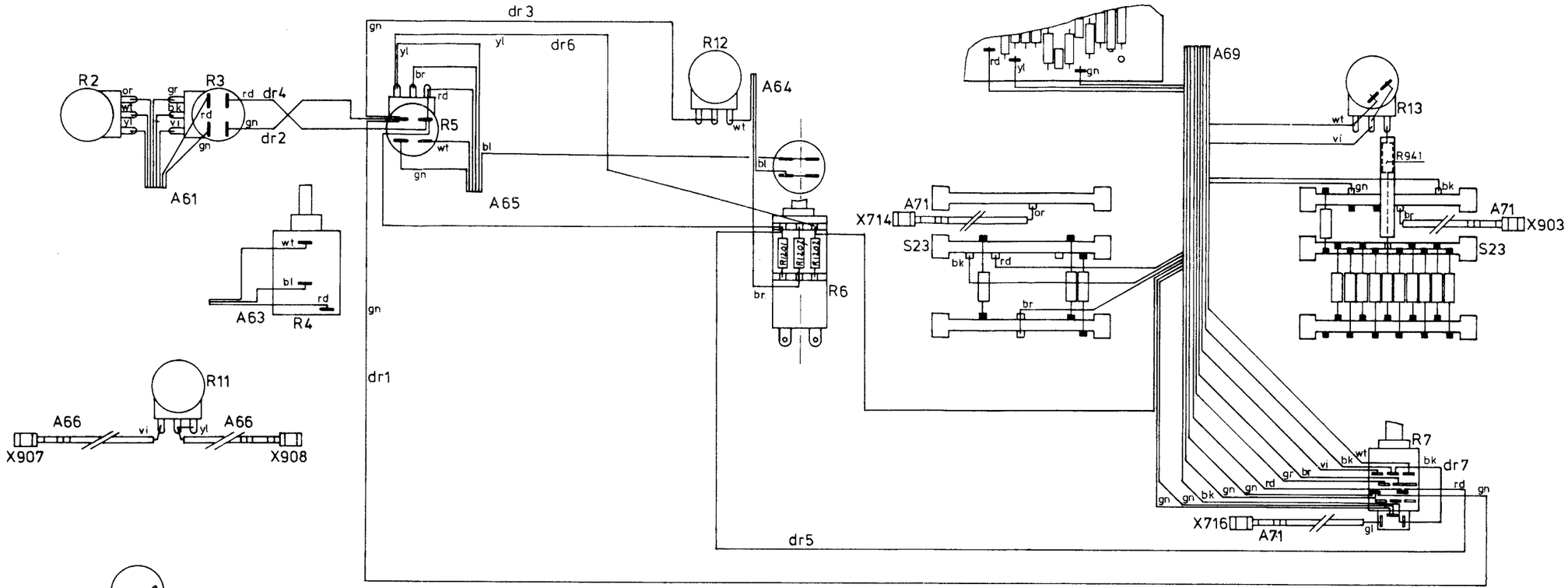

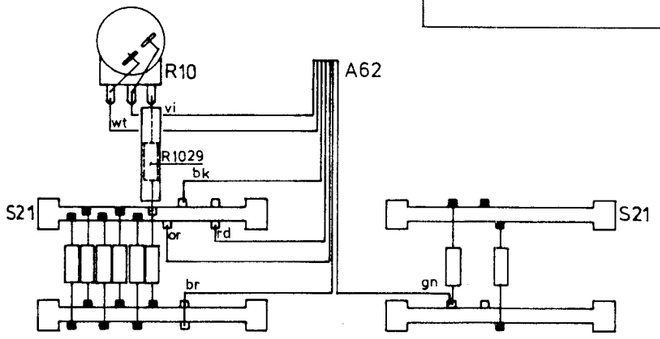

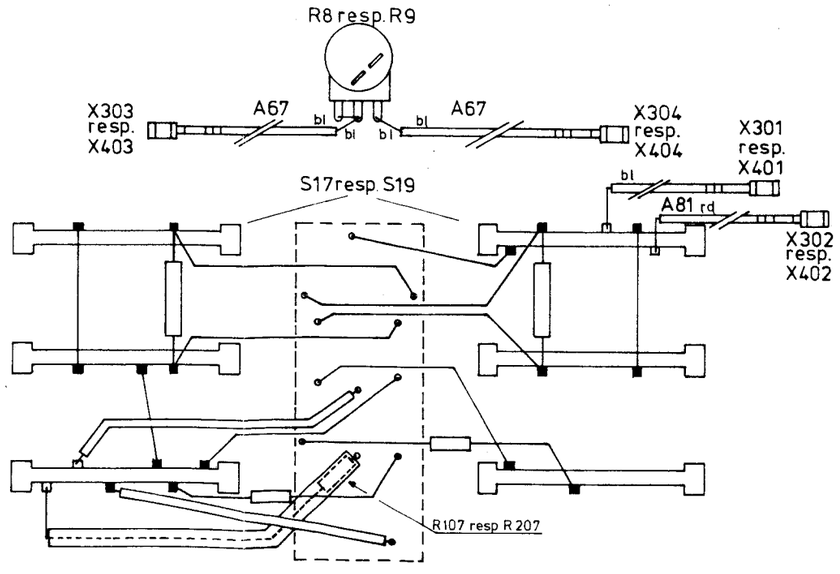

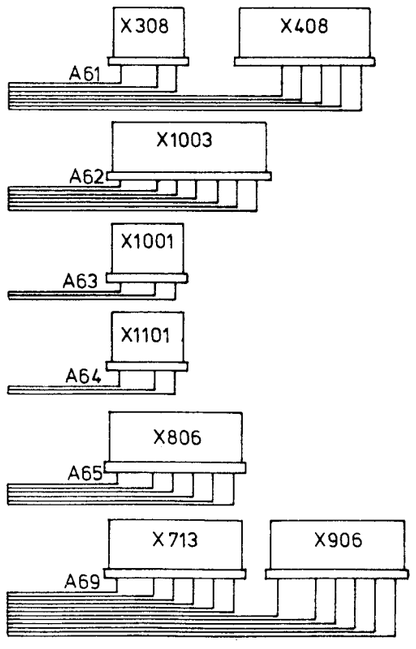

MAT 1043
810922

Fig. 9.4.